Roll-Around TV Stand • Bookcases • Flip-Seat Bench • Must Have Shop Jigs • Plate Joinery

Woodsmith®

Vol. 21 / No. 123

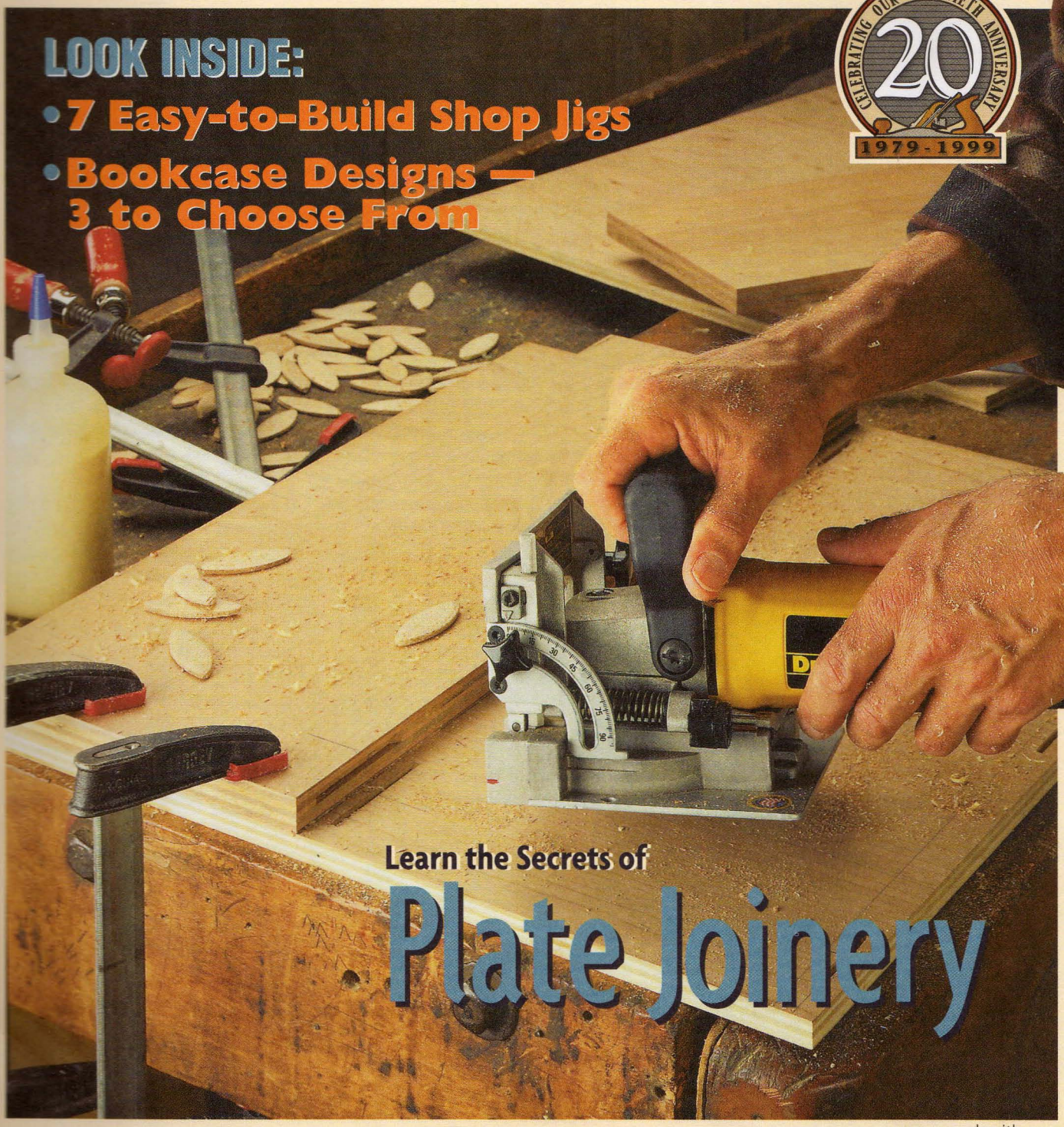

CELEBRATING OUR TWENTIETH ANNIVERSARY 20 1979-1999

LOOK INSIDE:

- 7 Easy-to-Build Shop Jigs
- Bookcase Designs — 3 to Choose From

Learn the Secrets of

Plate Joinery

www.woodsmith.com

Woodsmith

No. 123 June, 1999

Publisher Donald B. Peschke
Editor Terry J. Strohman
Associate Editors Jon Garbison, Vincent Ancona
Art Director Todd Lambirth
Senior Illustrators David Kreyling, Dirk Ver Steeg, Mike Mittermeier

CREATIVE RESOURCES
Creative Director: Ted Kralicek • *Project Developer:* Ken Munkel • *Sr. Project Designers:* Kent Welsh, Kevin C. Boyle • *Shop Manager:* Steve Curtis • *Shop Craftsman:* Steve Johnson • *Senior Photographer:* Crayola England • *Photographer:* Roderick Kennedy

BOOKS
Executive Editor: Douglas L. Hicks • *Art Director:* Steve Lueder • *Senior Graphic Designers:* Chris Glowacki, Cheryl L. Simpson • *Assistant Editors:* Joseph E. Irwin, Craig Ruegsegger • *Graphic Intern:* Vu Nguyen

CIRCULATION
Subscriber Services Director: Sandy Baum • *New Business Director:* Glenda K. Battles • *New Business Mgr.:* Todd Bierle • *Promotion Mgr.:* Rick Junkins • *Renewal Mgr.:* Paige Rogers • *Billing Mgr.:* Rebecca Cunningham • *Circ. Marketing Analyst:* Kris Schlemmer • *Asst. Subs. Mgr.:* Joy Krause • *Creative Mgr.:* Melinda Jo Haffner

CORPORATE SERVICES
Vice President of Planning and Finance: Jon Macarthy • *Controller:* Robin Hutchinson • *Sr. Account.:* Laura Thomas • *Accts. Payable:* Mary J. Schultz • *Accts. Receivable:* Margo Petrus • *Production Dir.:* George Chmielarz • *Production Assistant:* Susan Rueve • *Electronic Publishing Director:* Douglas M. Lidster • *Network Administrator:* Cris Schwanebeck • *Pre-press Image Specs.:* Troy A. Clark, Minniette Bieghler • *New Media Manager:* Gordon C. Gaippe • *Web Site Art Director:* Gene Pedersen • *E-Commerce Analyst:* Carol Schoeppler • *Web Site Editor:* Holly Kilborn • *H.R. Assistant:* Kirsten Koele • *Admin. Assistant:* Julia Fish • *Receptionist:* Jeanne Johnson • *Special Projects Director:* Saville H. Inman • *Building Maint.:* Ken Griffith

WOODSMITH MAIL ORDER
Operations Dir.: Bob Baker • *Customer Service Mgr.:* Jennie Enos • *Warehouse Supr.:* Nancy Johnson • *Buyer:* Linda Jones • *Tech. Service Rep.:* Matt TeRonde • *Admin. Assist.:* Nancy Downey • *Cust. Serv. Reps.:* Anna Cox, Tammy Truckenbrod, Adam Best, Deborah Rich • *Warehouse:* Sylvia Carey, Dan Spidle, Eric Tullis, Sheryl Knox

WOODSMITH STORE
Manager: Dave Larson • *Assistant Manager:* Paul Schneider • *Sales Staff:* Pat Lowry, Wendell Stone, Jim Barnett, Kathy Smith, Larry Morrison • *Office Mgr:* Vicki Edwards

Woodsmith® (ISSN 0164-4114) is published bimonthly (Feb., Apr., June, Aug., Oct., Dec.) by August Home Publishing Company, 2200 Grand, Des Moines, IA 50312.

Woodsmith® is a registered trademark of August Home Publishing.
Copyright© 1999 August Home Publishing Company. All rights reserved.

Subscriptions: Single copy: $4.99. One year subscription (6 issues), $21.94. (Canada/International add $10 per year, U.S. funds.)
Periodicals Postage Paid at Des Moines, IA and at additional offices. USPS/Heartland Press Automatable Poly.
Postmaster: Send change of address to *Woodsmith*, Box 37112, Boone, IA 50037-2112.
Subscription Questions? Write to *Woodsmith*, P.O. Box 842, Des Moines IA 50304-9961 or call 1-800-333-5075, 8:00 am to 5:00 pm, Central Time, weekdays. Or send an e-mail to: orders@woodsmith.com
E-Mail: woodsmith@woodsmith.com
World Wide Web: http://www.woodsmith.com

Printed in U.S.A.

EDITOR'S COLUMN

SAWDUST

We've had a plate joiner in our shop for some time. Actually that's not true — we *own* a plate joiner, but it doesn't spend much time in the shop. Someone is always borrowing it to work on projects at home.

The reason is simple. Plate joinery is a quick, easy way to join two pieces of wood. Just cut a slot in each piece with the joiner, then glue in a football-shaped biscuit, and clamp the pieces together.

But as simple as it is, we've never used a plate joiner to build a project in *Woodsmith*. At least not until now.

Since more and more woodworkers are using plate joiners, in this issue I decided to feature two projects that are assembled with this tool.

BOOKCASE. The first project I had in mind was a bookcase. It would provide a perfect opportunity to use some basic plate joinery. And since plate joints are quite strong, they would be ideal for joining the shelves to the sides.

But using plate joinery isn't the only thing different about this project. Instead of featuring *one* bookcase we ended up with *three*: a traditional oak, a country pine, and a classic maple.

It was an interesting design challenge. Start with one basic case and then transform it into three different looking bookcases. For more information on how we did it, see the article that begins on page 20.

TV STAND. After completing the bookcases, I wanted to try my hand at another plate joinery project. But something a bit more challenging.

One look at my old TV stand provided the inspiration for the feature project in this issue. It was time to do something about the stack of videos and the jumble of wires in back.

We came up with a unique roll-around stand that features four drawers for video storage, adjustable shelves for components, and a removable back for concealing all the wires that connect them. This article begins on page 6.

ALTERNATIVES. If you don't have a plate joiner — don't worry. You can build both of these projects using more traditional types of joinery. In fact, we've included alternative methods for both.

MILESTONES

As I mentioned a few issues back, this is a special year for *Woodsmith* — it's our 20th Anniversary. But this issue of *Woodsmith* has special significance for a couple of our Senior Illustrators.

This is David Kreyling's 100th issue. Since 1982 David has been helping produce the artwork each issue. Congratulations and thank you, Dave!

I would also like to congratulate Dirk Ver Steeg on his 50th issue of *Woodsmith*. And thank him for all the illustrations he's contributed as well.

Terry

A LOOK INSIDE

CONTENTS

Features

Roll-Around TV Stand 6

The black trim on this cherry TV stand gives it a unique look. But modern features like storage drawers for video tapes and heavy-duty casters make this a practical and useful project as well. There's even a removable back for wiring access.

Plate Joinery 14

If you're looking for a strong, fast, and easy-to-make joint, it's hard to beat plate joinery. This technique article will provide all you need to know to get started or help you brush up on using a plate joiner if it's been awhile.

Three Bookcases 20

Three bookcases, one basic design. That's the idea behind this project. All three start out the same. But they end up looking unique because we added different face frames and molding profiles.

"Must Have" Shop Jigs 26

Over the years, we've built a number of jigs in the Woodsmith shop. Here are a few of our favorites. And the nice thing is each one can be built in an afternoon, usually out of scrap wood.

Flip-Seat Storage Bench 30

This easy-to-build bench makes a great weekend project. It's the perfect size for a hallway or entry porch. And in addition to providing a place to sit down when putting on your boots, it also has a convenient storage area underneath the lid.

Departments

Tips & Techniques 4
Shop Notes 18
Reader's Jig 34
Sources 35

Roll-Around TV Stand page 6

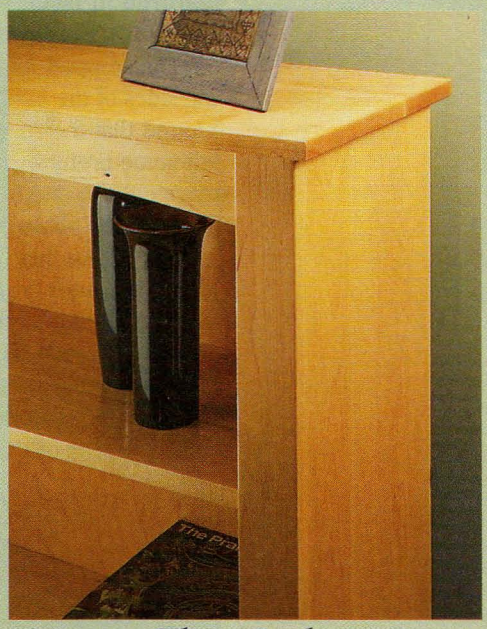

Three Bookcases page 20

Shop Jigs page 26

Flip-Seat Storage Bench page 30

TIPS & TECHNIQUES

Router Ramps

Recently I was making the classic bookcase that was featured in issue #95 of *Woodsmith*. But when routing the stopped flutes on the sides of the bookcase, I found that the router bit left some pretty bad burn marks at the end of each flute, see left photo below.

To overcome this, I made a couple router "ramps." These look like miniature skateboard ramps. By sliding the router up the ramp, the bit is lifted smoothly out of the flute. Not only do you eliminate the burning, but you also get a nice, tapered end to the flute, see right photo below. This method worked so well that now I use it just about anytime I'm building a project that calls for routed flutes.

The ramps are nothing more than scraps of "2x4" stock with arcs cut in them. The blanks for the ramps should be the same width as the stock that you are routing the flutes in.

For the flutes in the bookcase, I found that a 3"-radius arc was just about right. (I used the baseplate of my router as a template to lay out the arc on the side of the workpiece, see photo in margin.) After laying out the arcs, I cut them on a band saw and sanded them smooth on a drum sander.

To use the ramps, simply clamp them to the end of the workpiece, making sure that the end of each ramp is square to the edge of the workpiece, see Fig. 2. (You could also tape the ramps down with double-sided carpet tape.)

With a jig or edge guide attached to your router, the ramps will help lower and raise the router into the cut, see Figs. 3 and 3a.

There's one thing to be aware of. I found that the sharp edge of my router base had a tendency to "catch" on the edge of the ramp at the end of the flute. To avoid this, I simply filed a slight chamfer on the edge of my router base plate.

Bob Wickstrom
Overland Park, Kansas

▲ *Routing a stopped flute usually results in burn marks at the ends.*

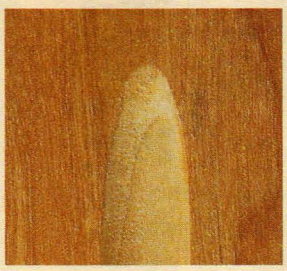

▲ *The ramps lift the bit out of the flute, leaving a clean, tapered end.*

▲ *A router base makes a handy template for laying out the profile of the ramp.*

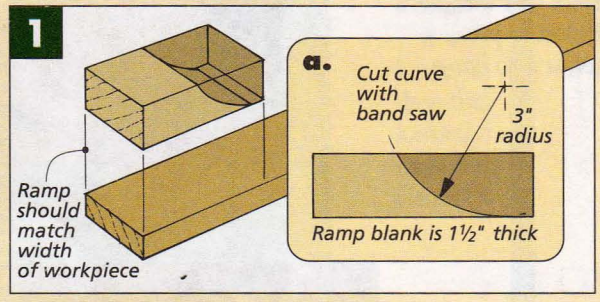

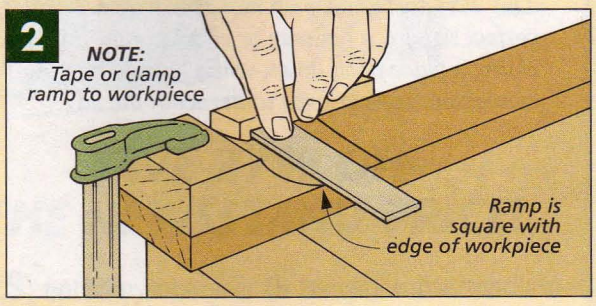

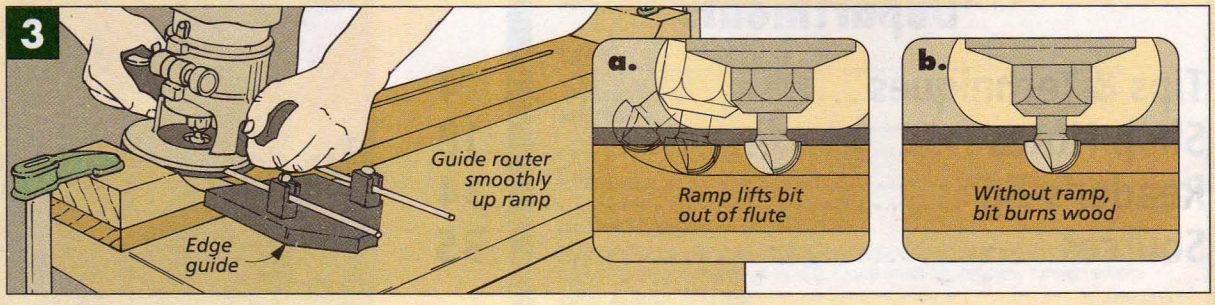

Dovetail Layout Tool

I've often admired the little dovetail layout tools that I've seen in fancy tool catalogs. But I haven't been able to bring myself to spend the money on one.

So instead, I did the next best thing and built my own out of nothing more than a block of wood and a strap hinge, see photo.

Start by cutting off the end of the hinge with a hack saw. (I used a 4" strap hinge with an angle of about 6°.) Then cut a small block of wood for the "base" of the tool, see drawing.

Place the cut-off portion of the hinge on the block of wood and trace around it with a knife or sharp pencil. When doing this, it's important to make sure that the centerline of the hinge is square with the edge of the block. Otherwise, the sides of the dovetails won't be at the same angle.

After tracing the profile of the hinge, cut a shallow recess in the block on a table saw or with a chisel.

Now just fasten the hinge to the block with a couple screws. (You may have to drill an additional hole in the hinge for the mounting screws.)

To use the layout tool, simply place the inside edge of the base against the face of your workpiece and mark off the dovetails.

John Molburg
Minooka, Illinois

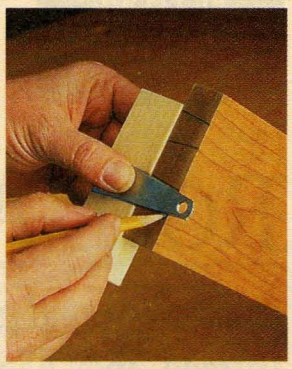

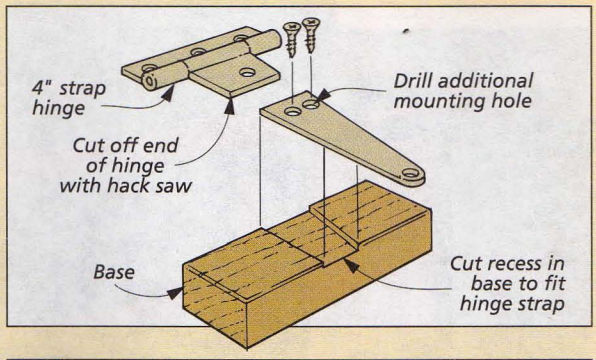

Repairing Mitered Corners

A while back I was building a large plywood box using mitered corner joints. The angle of my saw blade must have been a little bit off when I cut the joints, however, since when I assembled the box there was a gap on the outside of each joint.

Instead of simply filling the open joint lines with wood putty or throwing the box out and starting over, I salvaged the project in a different manner.

Using a straight bit on my router table, I cut a square rabbet along each corner, see Figs. 1 and 1a.

Next, I cut some strips of wood to fit into the rabbets. I made the strips slightly oversize and glued them into the rabbets.

After the glue dried, I trimmed the strips flush with the sides of the box using a router and a flush trim bit, see Figs. 2 and 2a.

Gary Schmadeke
Waterloo, Iowa

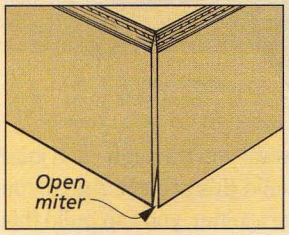

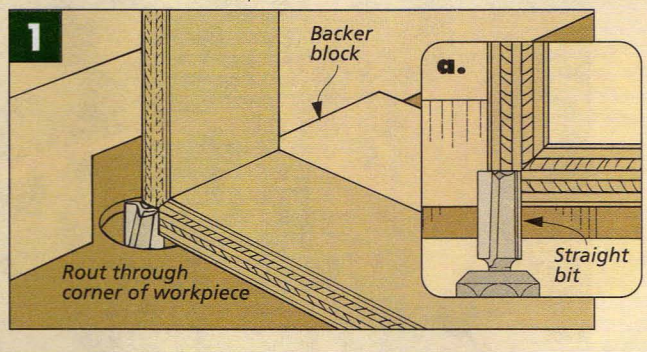

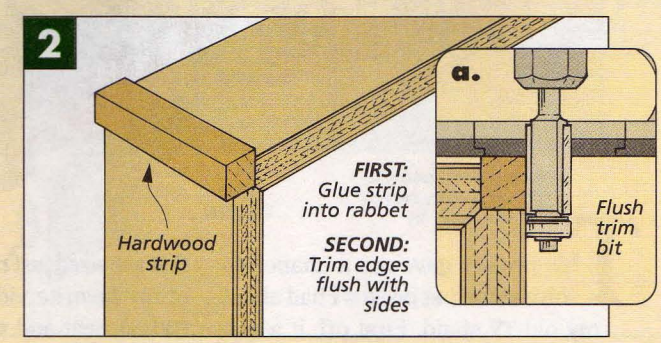

SUBMIT YOUR TIPS

If you would like to share an *original* shop-tested tip, send it to: *Woodsmith,* Tips and Techniques, 2200 Grand Avenue, Des Moines, Iowa 50312. Or if it's easier, FAX it to us at: 515-282-6741. Or use our E-Mail address: woodsmith@woodsmith.com.

Include a brief explanation and sketch or photo. If your tip is published, you'll receive $30 to $150, depending on the published length. And don't worry, we'll rewrite the tip and redraw the art, if necessary. Also, *please* include a daytime phone number so we can contact you if we have any questions regarding your tip.

Outfeed Table

I recently had to move my shop into one half of a small garage, which didn't leave me much room for a table saw outfeed table.

So when I need outfeed support, I simply use my drill press. I pull the drill press up behind the table saw and lower the table to the height of my table saw top, see photo at right.

Roland Romito
Broadview Heights, Ohio

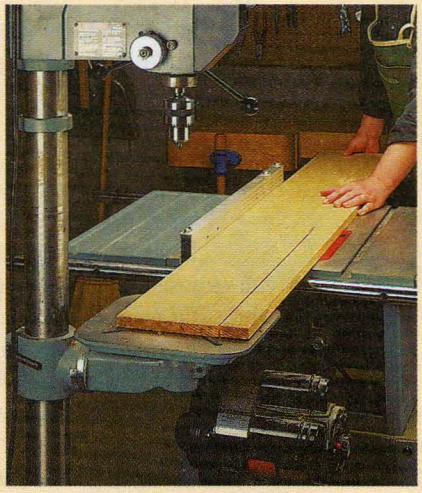

FEATURE PROJECT

ROLL-AROUND TV STAND

Build this stand and your eyes will no longer be glued to the TV set. Instead, they'll be checking out the handsome cherry construction.

This project gave me a chance to solve some pet peeves I had about my old TV stand. First off, it was a "bear" to move — whether you were just turning the set so everyone could see or moving it to rearrange the room. But this stand "floats" on casters, so moving it is no trouble at all.

The casters also allow you to get at the back of the stand easily, which was another pet peeve I had. Plus, the back panel is removable, so you can expose all the cords and cables when you need to get at them. And when you're done, there's no tangle of cords hanging out, either. The back covers all the "spaghetti," see the photos at the top of page 11.

Finally, the stand has four drawers that are sized just right for keeping all of my favorite videos (or CD's and DVD's) neat and well-organized. So there's no more "leaning towers" of videos stacked on top of the TV.

This is quite a few features to "pack into" a project. But that doesn't mean it has to be complicated. The stand is built in sections: a base, two drawer cases, and a top. And to keep it as simple to build as possible, I used plywood construction and plate joinery, see photo at right.

If it's been awhile since you've opened the case to your plate joiner, don't worry. There's an article on page 14 that will walk you through each joint used to build this project. And if you don't have a joiner, you can build this TV stand with splines and other traditional joinery, see page 19.

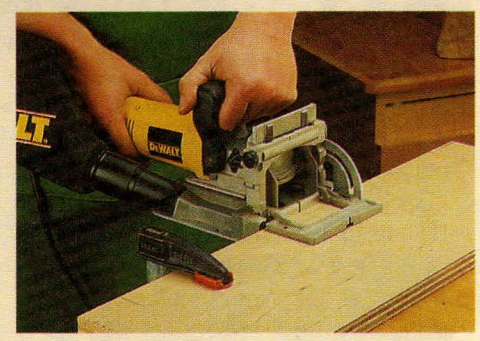

▲ *Plate joinery allows you to build this TV stand both quickly and easily. See the joinery article on page 14.*

Construction Details

OVERALL DIMENSIONS: 39½"W x 26¾"D x 25⅞"H

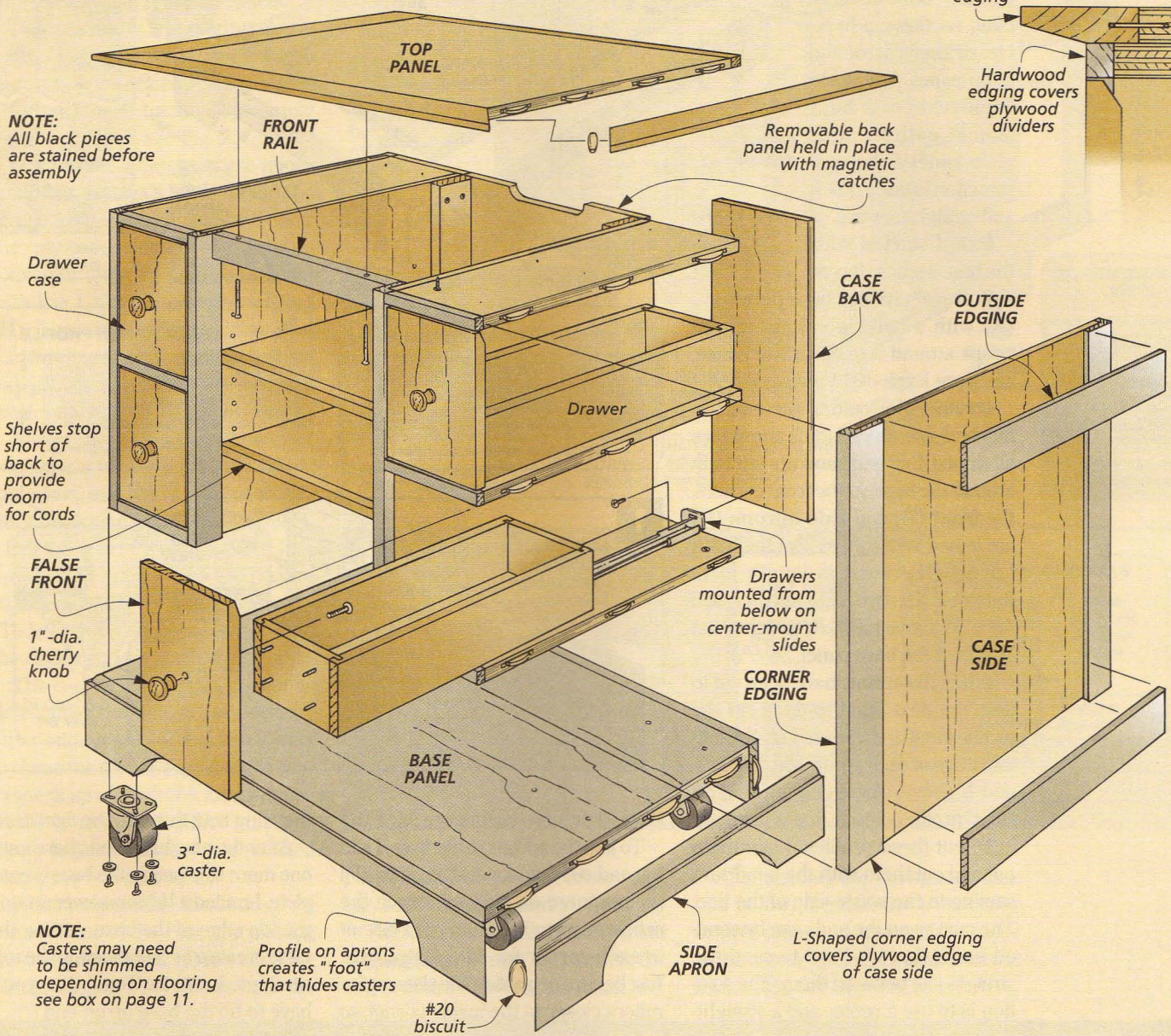

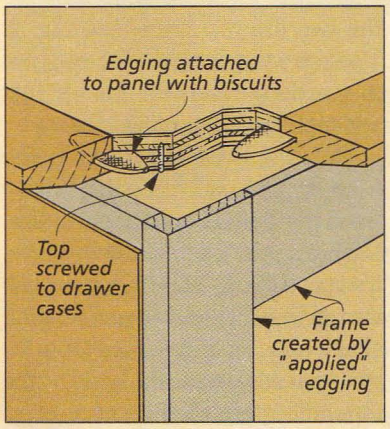

Basic construction. *Building this stand is straightforward. Even the frame on the sides is only "applied."*

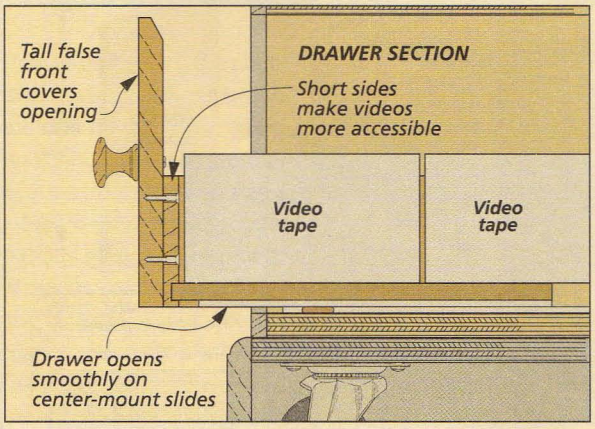

Video storage. *Each drawer holds 8-10 videos, and the short sides make them easy to identify and get in and out. (The drawers are also sized to hold CD's and DVD's.)*

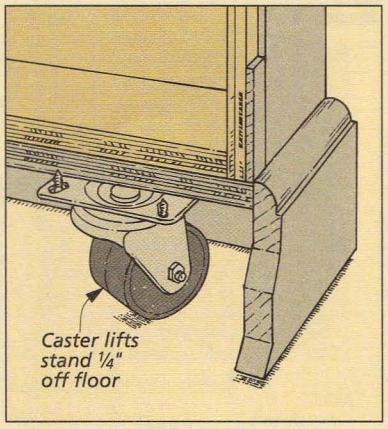

"Floating" stand. *To make the stand easy to turn and move, four wide-casters lift the base off the floor.*

Base & Cases

As I mentioned, this TV stand is built in three main sections: a base, two drawer cases, and a top panel. And since each section is built almost entirely with plate joinery, the construction is fairly quick and straightforward.

BASE. I started with the base section. It consists of a 3/4" plywood **base panel (A)** with a solid wood apron that wraps around it to cover the edges, see Base Exploded View at right.

APRONS. After cutting the panel to finished size, the 3/4"-thick aprons are all ripped 4 3/8" wide and are cut to fit around the base. At the front corners, the **front (B)** and **side aprons (C)** are joined with miters. But the **back apron (D)** is cut to length to fit between the two side aprons, see detail 'c' above right. (It matches the length of the base panel, 36 1/2".)

When the aprons have been cut to size, the next thing to do is cut the profiles that are centered on the bottom edge of each apron, see details 'a' and 'b' above. These cutouts create a "foot" profile on each side of the base.

To cut these profiles, I laid them out and cut them with the band saw, staying to the waste side of the line. The curves on the ends can be sanded easily, but it's hard to sand the straight line between them. The solution is to use a router and a straight-edge. (For more on this, see page 18.)

To join the aprons to the base, I laid out and cut slots for #20 biscuits. (I'll go into more on plate joinery in the article on page 14.) I also put a biscuit in each corner for added strength. Just be sure to position the slots on the miters closer to the inside corner so they don't cut through the front face.

After the glue has dried, there's still one more step before the base is complete. I routed a 1/2" roundover around the top edge of the base, setting the bit to create a 1/8" shoulder on the top, see Figs. 1 and 1a. To do this, you'll have to tip the base up on end.

DRAWER CASES. With the base complete, you can move on to building the two drawer cases, see Fig. 2. These are simple plywood boxes, but they're dressed up with "frames" that are applied to their outside faces.

The **case sides (E)** are cut to size from 1/2" plywood. Then the 3/4" plywood **dividers (F)** can be cut to size. But before you assemble these pieces, it's a good idea to label the top and bottom dividers. Then drill countersunk shank holes in their *inside* faces for attaching the cases to the base and the top (built later), see Fig. 2a.

Like the base, the drawer cases are assembled with biscuits. But because the case sides are only 1/2" plywood,

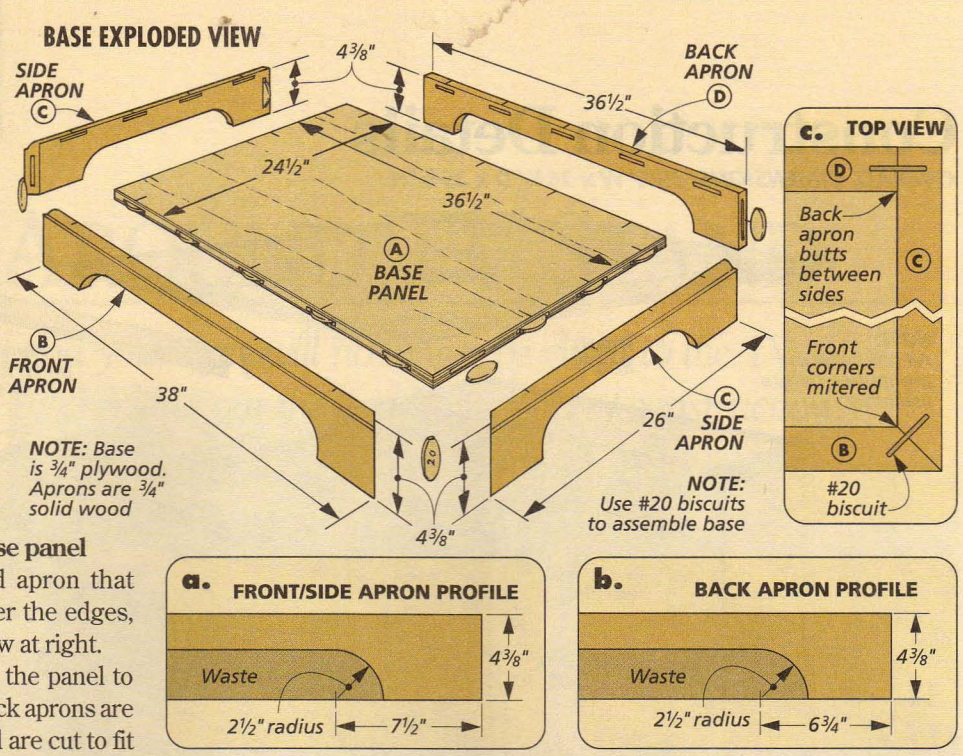

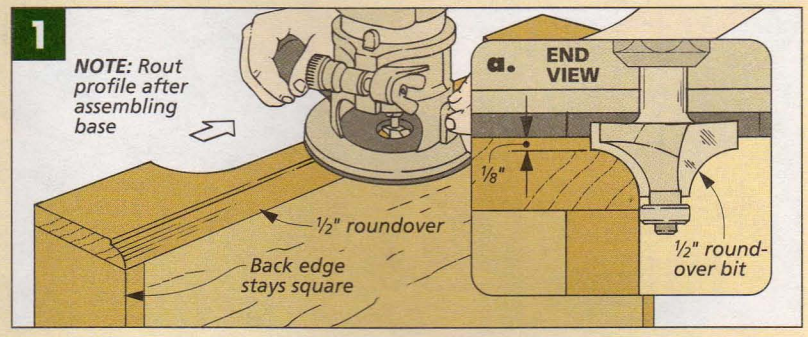

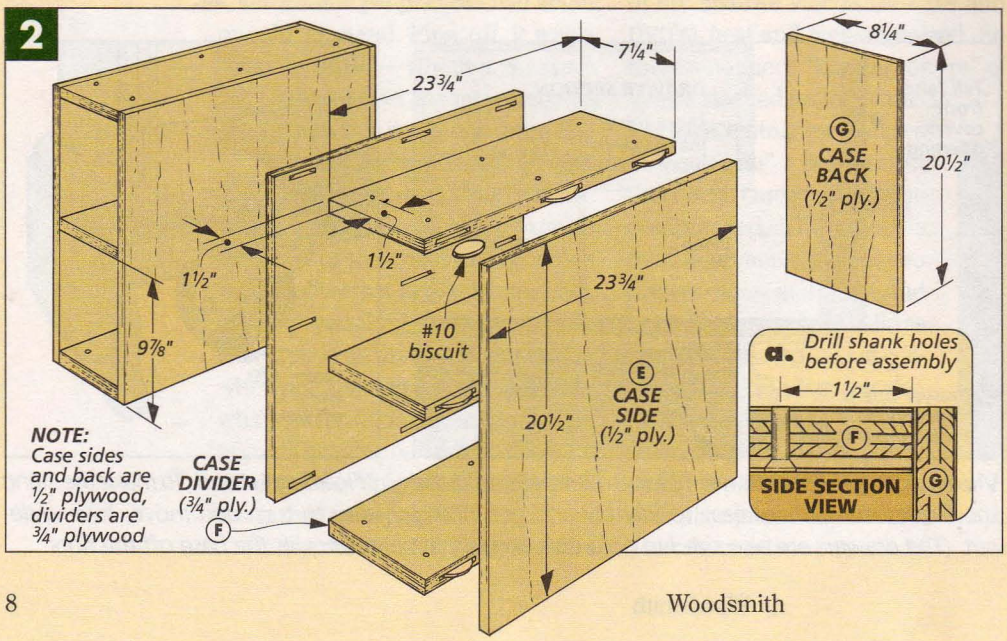

you'll need to use #10 biscuits. Otherwise, the slots will cut all the way through the plywood panels.

Before adding the edging to the cases, I cut ½" plywood panels to size to cover their back edges, see Fig. 2. Then each **case back (G)** is simply glued to its case, see Fig. 2.

CASE EDGING. The cases are about complete. All that's left is to add the "frame" on the outside faces and cover the plywood edges, see Edging Exploded View. To do this, I started with the L-shaped **corner edging (H)**. It covers the plywood edging on the two front corners and the back *outside* corner of each case. Plus, it creates the vertical stile of the "frame."

Making the L-shape on the corner edging is a two-step process on the table saw, see Fig. 3. With the ¾"-thick blanks cut to size (2½" x 20½"), I first cut a kerf with the piece face down, see Fig. 3a. Then the second pass removes the waste, see Fig. 3b. (To hold the workpiece tight against the rip fence, I used a featherboard.)

The corner edging you just made determines the thickness of the two other edging pieces, and you'll want to clamp the corner edging to the case to sneak up on their thicknesses, see detail 'a' above. (I didn't glue any pieces in place until they were stained black, see box below.)

First, I completed the "frame" on the outsides of the cases by planing the **outside edging (I)** to match the corner edging (¼"). Then I cut the pieces to fit between the corner edging, see Edging Exploded View.

The last piece of edging, the **front edging (J)**, is simply cut to cover the edges of the dividers, see detail 'a'.

After staining the workpieces (see box below), I glued the trim to the drawer cases and screwed the cases to the base so they were flush with the back edge, see detail 'b' above.

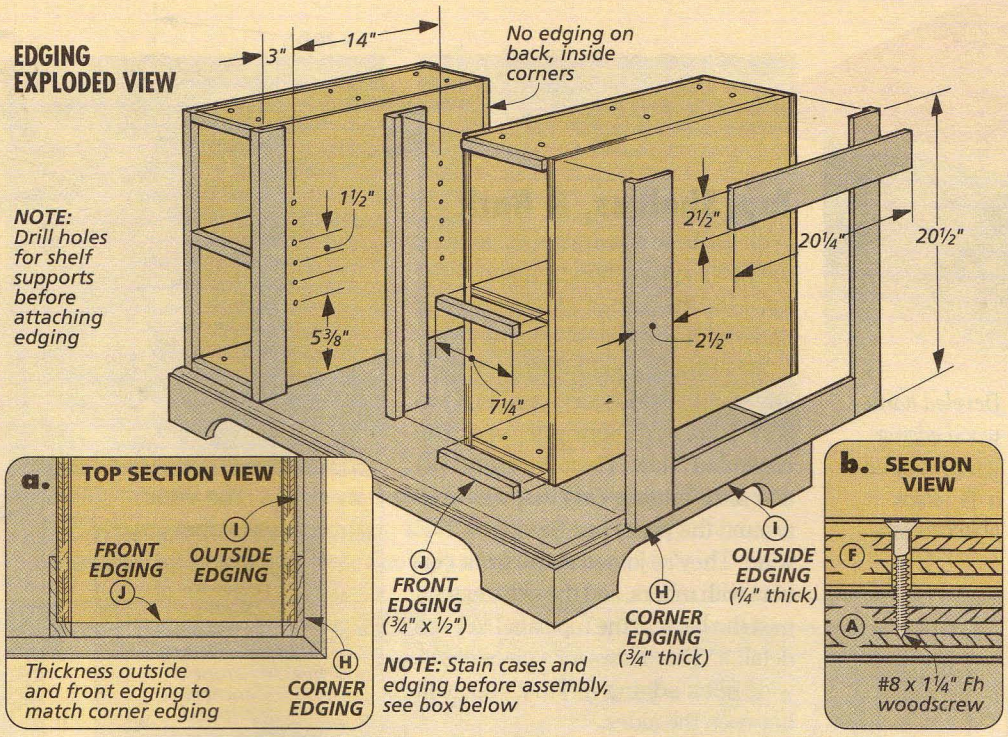

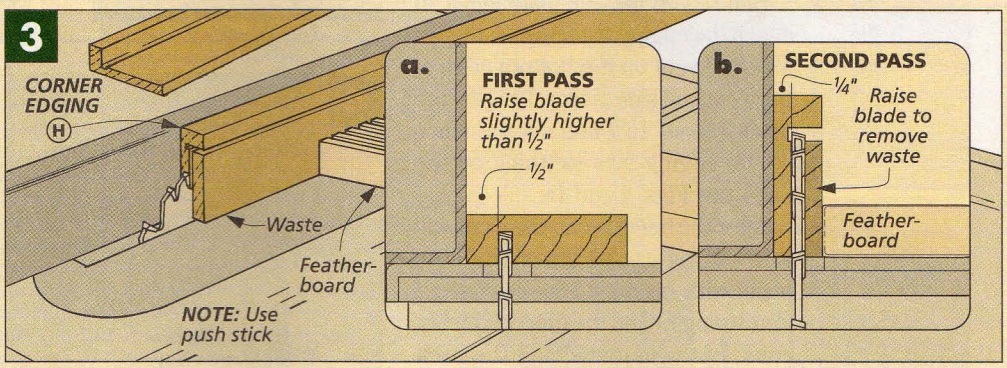

PRE-ASSEMBLY STAINING

The contrast between the black trim and cherry plywood required a change in my usual routine. Instead of completing the project and then applying the finish, I had to stain the trim *before* it was glued to the case, see left photo. Plus, the base had to be stained before adding the drawer cases.

To stain the edging and base, I used a black aniline dye. (For more on mixing and applying the dye, see page 18.)

Then to make sure the cherry solid wood and plywood would end up the same color, I also stained the cases at this time. As a precaution though, you don't want to stain any surface that's going to get glued. This means you'll need to tape off the "frame" on the sides of the cases, see right photo.

Finishing Tip: If you find scratches in the black pieces later, you can use a black marker to touch them up.

▲ *The edging pieces for the case are stained with black aniline dye before they're glued in place, see page 18.*

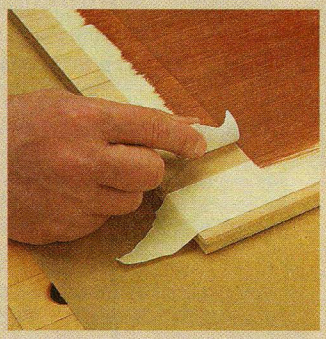

▲ *If you're staining the cherry plywood, tape off the areas where the black trim pieces will be glued in place.*

▲ *Beveled hardwood edging wraps around a ¾"-thick plywood top.*

Top, Shelves, & Back

With the base and drawer cases built, the last large section to make is the top. Like the base, it's just a plywood panel with solid wood edging.

TOP PANEL. To build the top, I started by cutting the **top panel (K)** to size from ¾" plywood, see Top Exploded View. Then the **front (L)** and **side edging (M)** that will wrap around the panel can be ripped 2½" wide. They're joined at the front corners with miters, and the sides extend past the back of the top panel ¾", see detail 'a.' This allows for a piece of ¾"-wide **back edging (N)** that's cut to fit between the sides.

Before you use the plate joiner to attach the edging to the panel, there's a bevel to cut on the bottom edge of the front and side pieces. I angled the blade (about 16°) and set the fence so the edging was ⅜"-thick on the ends, see Figs. 4 and 4a.

After the bevel is cut, the front and side edging can be attached to the panel with biscuits. Like the base, I also strengthened the miters with biscuits. But when attaching the back edging (N), I simply glued it in place, see Top Exploded View.

When the glue had dried, I screwed the top to the drawer cases. It's flush with the back and centered side-to-side, see detail 'b' above right.

With the top in place, I worked on the space *between* the cases, adding a front rail, two shelves, and a removable back panel, see Figs. 5 and 6.

FRONT RAIL. I started with a **front rail (O)**, which fits between the corner edging (H) on the cases, see Figs. 5 and 5a. This ¾"-thick piece is cut to size, stained black, and then glued and screwed to the bottom of the top panel flush with the back edge of the corner edging.

SHELVES. This is a good time to cut the ¾" plywood **shelves (P)** and ¾"-wide **shelf edging (Q)** to fit between the case sides, see Fig. 5. The shelves aren't as deep as the cases. They butt against the back edge of the corner

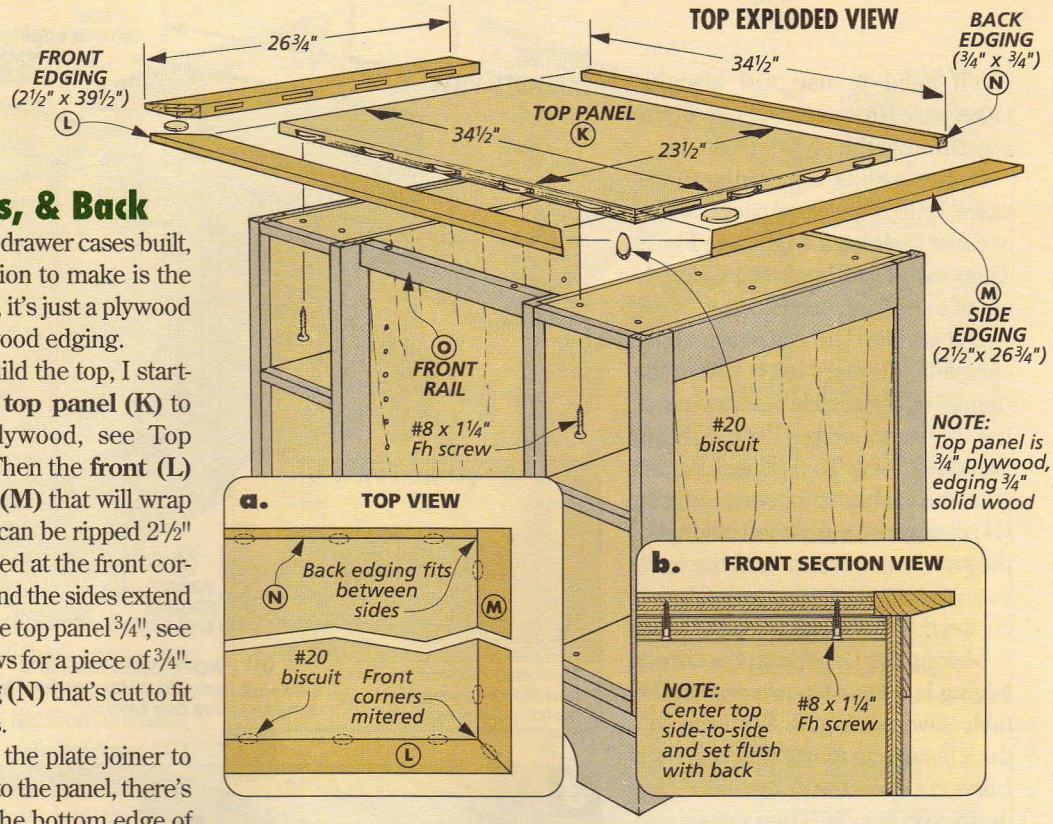

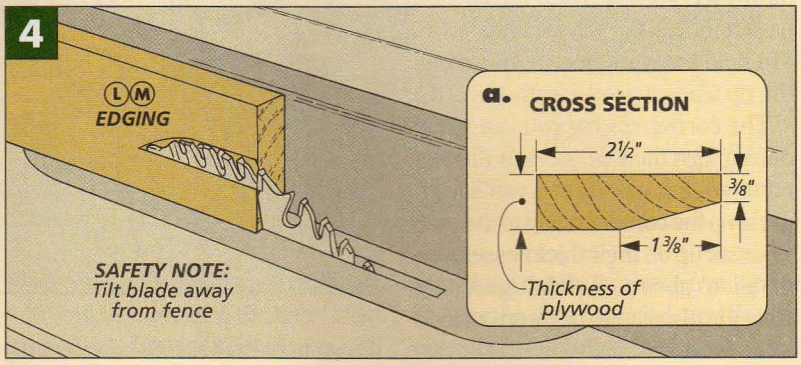

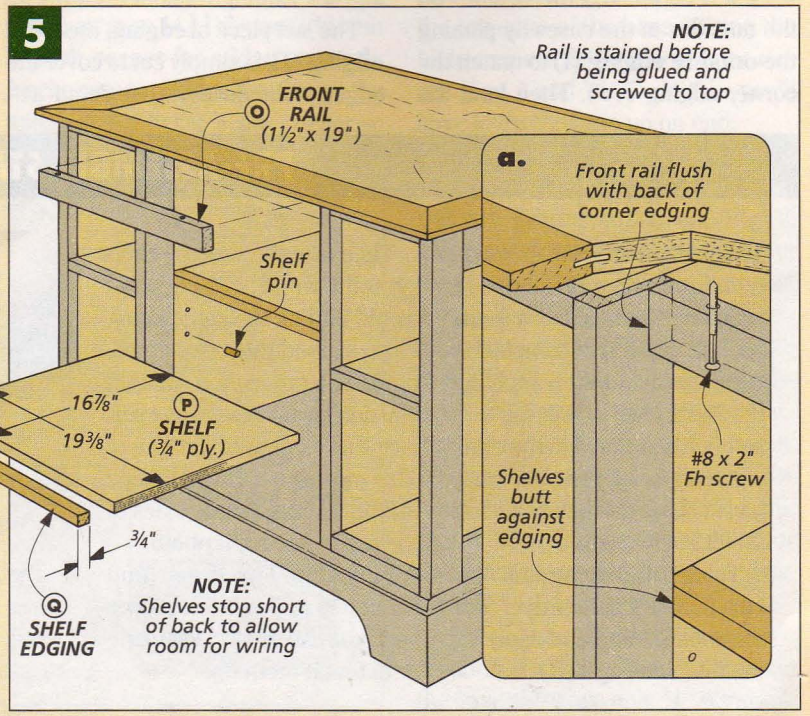

edging (H) in the front, see Fig. 5a. And they stop well short of the back so there's room for the cables and power cords, see Fig. 6.

BACK PANEL. With the shelves resting on shelf pins, I began working on the back. Trying to wire TV and audio equipment from the front of a case is a real hassle, so I made the back panel removable, see photos. To do this, the back butts against two spacers and is held in place with magnetic catches, see Fig. 6.

The **back spacers (R)** are 3/4"-thick pieces cut to fit between the top and base (4" x 20½"), see Fig. 6. Then before screwing them to the cases, I added barrel-style magnetic catches to their back edges, 2" from the ends, see Fig. 6b. Note: I didn't have a metric drill bit that matched the size of the catches, so I epoxied them into slightly oversized (9/16") holes, see Fig. 6b.

With the spacers attached, I cut a ½" plywood **back panel (S)** to fit the opening with a 1/16" gap around it. Then I made a small cutout at the top and bottom to allow the TV cords to feed in and a power cord to feed out.

Now to attach the back, simply screw the strike plates for the magnetic catches to the inside face of the panel and set the back in place.

Finally, before building the drawers, you can mount the stand on its casters, see box below.

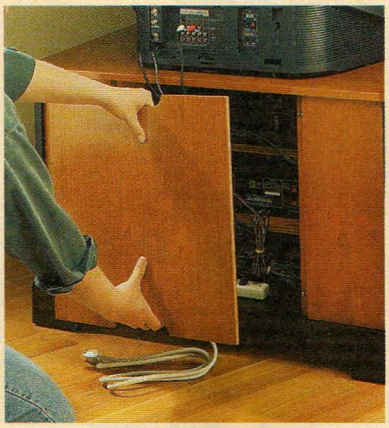

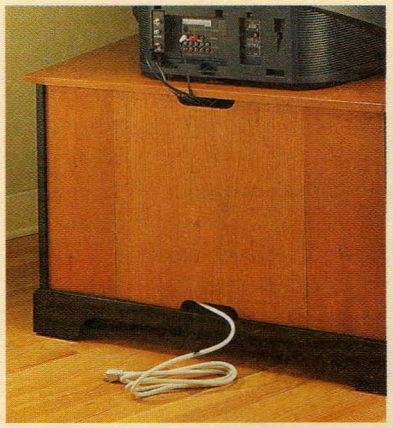

▲ *Wiring TV and audio equipment is no problem with this stand. The back is held in place with magnetic catches, so it can be removed quickly. And when the back is replaced, there's no ugly tangle of cords.*

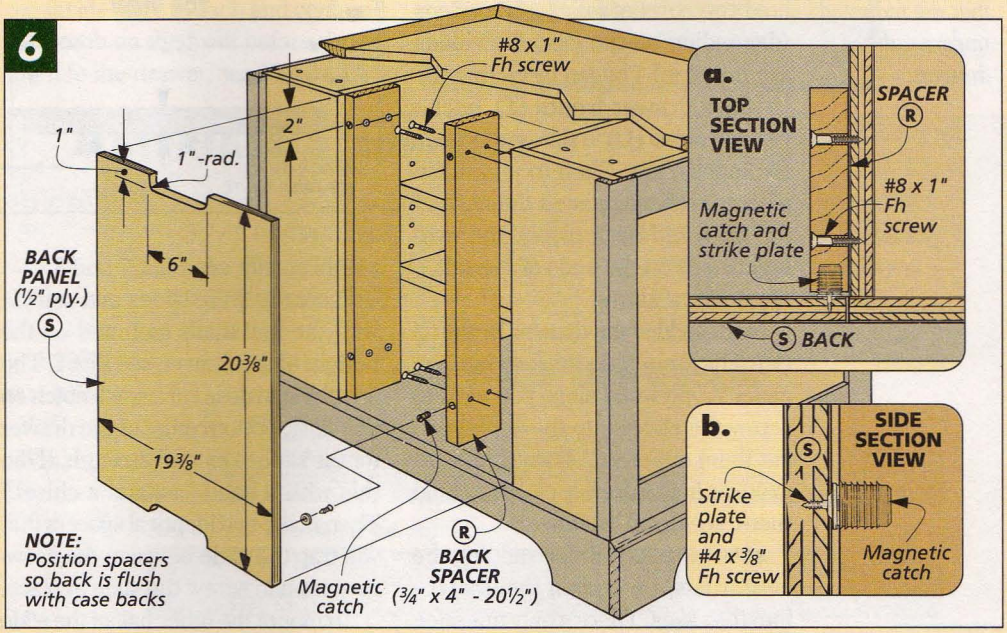

INSTALLING THE CASTERS

This TV stand is designed to roll on casters so you can turn the TV slightly or get at the back of the stand. Mounting casters is easy, see left drawing. The trick here is figuring out how much to shim them so the stand doesn't drag.

Without any shims, the TV stand will roll on a hard surface with 1/4" clearance under the "feet" of the apron, see right drawing. But if you have carpet, you'll need to shim the casters down to "lift" the stand.

The size of these shims will depend on the thickness of your carpet (and the pad under the carpet), see right drawing. And unfortunately, this process is one of trial and error. You'll have to mount the casters and test them on your floor to find out how thick the shims will need to be.

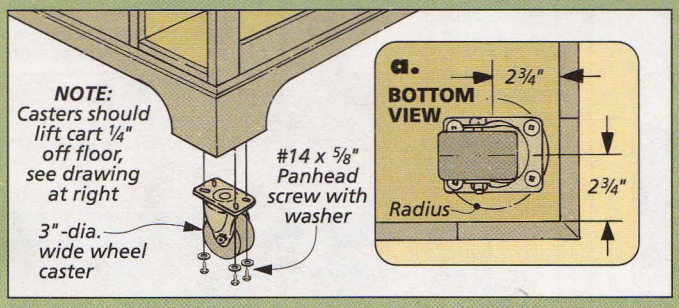

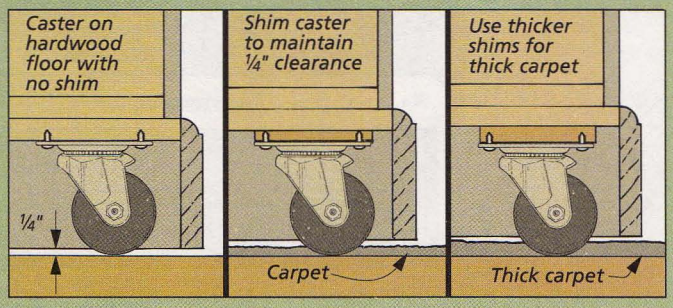

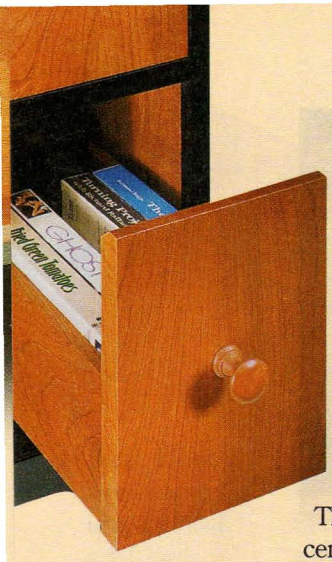

▲ *These drawers open on slides that are mounted underneath the drawers.*

Drawers

At my house, there's always at least one stack of videos precariously perched on top of the TV. So this stand has four drawers for storing videos (or CD's and DVD's, see box on next page).

The first thing you notice about the drawers is that their sides are short, see photo. This makes it easy to get the videos in and out. Also, you can't see any hardware. That's because the drawers ride on center-mount slides that are hidden *underneath* each drawer.

DRAWERS. Each drawer is sized to hold two rows of four to five videos (depending on the case the videos are stored in). I began by cutting the ½"-thick **drawer fronts (T), backs (T)**, and **sides (U)** to size, see Drawer Exploded View. Then to join these pieces, I cut tongues on the ends of the front and back pieces and mating dadoes on the ends of the sides, see detail 'a' above.

Next, I added the **drawer bottoms (V)**. They're a little thicker than the usual ¼" plywood since you need to screw the slides into these pieces. I cut them out of ½" plywood and cut grooves in the drawer pieces to hold them, see detail 'b' above.

MOUNT DRAWERS. Before adding the false fronts, I mounted the drawers into the cases. There's only one slide for each drawer. So the trick is to mount it so it's parallel to the sides of the case. This is easy to do with temporary spacers that center the slides automatically, see Figs. 7 and 8.

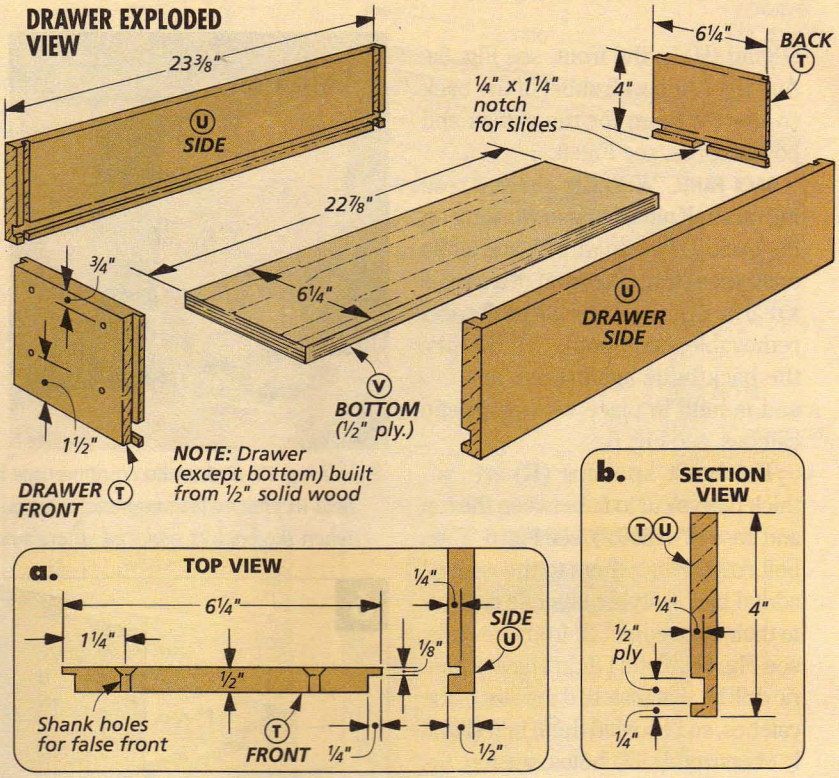

I separated the slides and started with the half that's mounted on the bottom of the drawer, see Fig. 7. The first thing to do is cut a small notch on the *back*, bottom edge of the drawer for the slide to extend through. (I did this with a hand saw and a chisel.) Then make two identical spacers that will trap the slide between the drawer sides and screw the slide in place.

To mount the other half of the slide in the case, I cut another set of spacers, see Fig. 8. (The spacers for the drawer and the case will be different sizes.) Position the slide 1¼" back from the front edge of the case and secure it with a screw in front.

At this point, getting a screw into the back of the slide would have been a real hassle. Fortunately, the slide is designed with a sliding L-shaped bracket so adding the screw in back is easy, see Fig. 8a. All you do is push the bracket against the back of the case and add another screw.

A center-mount slide can be a little "wobbly." So they come with nylon "glide tacks" to support the sides of the drawers, see Fig. 8. Their position isn't critical. Just push them in place so they won't be visible.

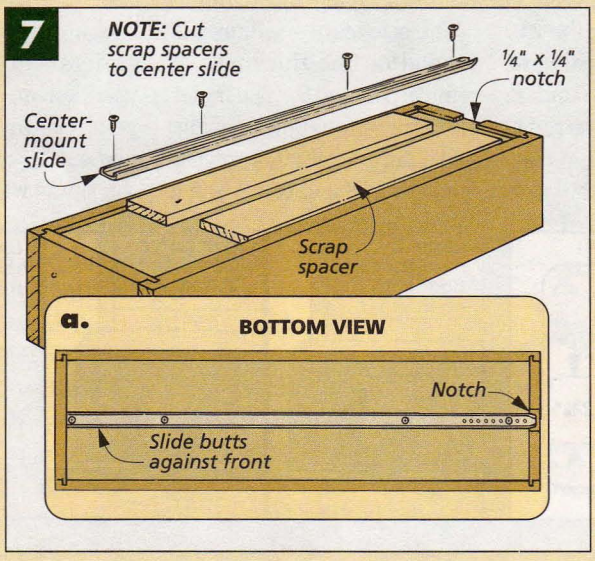

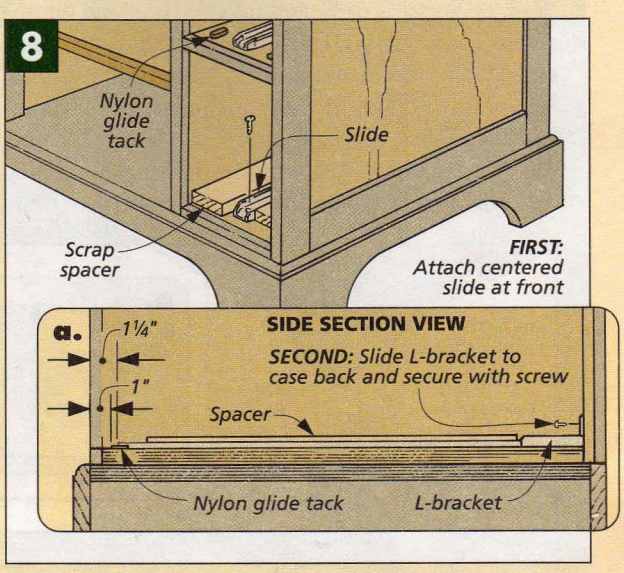

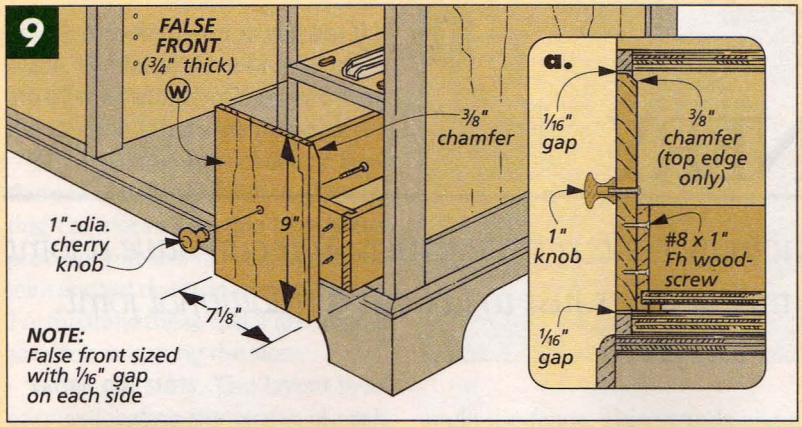

FALSE FRONT. The last pieces to add are the 3/4"-thick **false fronts (W)**, see Fig. 9. Typically, the grain on a drawer runs horizontally, but because the drawer is taller than it is wide, I thought it looked better with the grain running vertically. Also, I beveled the top inside edge of each and centered a 1"-knob on the front before screwing it to the drawer, see Fig. 9a. W

OPTIONAL HOLDERS

These drawers are sized so they'll also store CD's or DVD's. All you need is to purchase and install some plastic CD holders, see page 35 for sources.

MATERIALS & SUPPLIES

A	Base Panel (1)	3/4 ply. - 24 1/2 x 36 1/2
B	Front Apron (1)	3/4 x 4 3/8 - 38
C	Side Aprons (2)	3/4 x 4 3/8 - 26
D	Back Apron (1)	3/4 x 4 3/8 - 36 1/2
E	Case Sides (4)	1/2 ply. - 20 1/2 x 23 3/4
F	Case Dividers (6)	3/4 ply. - 7 1/4 x 23 3/4
G	Case Backs (2)	1/2 ply. - 8 1/4 x 20 1/2
H	Corner Edging (6)	3/4 x 2 1/2 - 20 1/2
I	Outside Edging (4)	1/4 x 2 1/2 - 20 1/4
J	Front Edging (6)	3/4 x 1/2 - 7 1/4
K	Top Panel (1)	3/4 ply. - 23 1/2 x 34 1/2
L	Front Edging (1)	3/4 x 2 1/2 - 39 1/2
M	Side Edging (2)	3/4 x 2 1/2 - 26 3/4
N	Back Edging (1)	3/4 x 3/4 - 34 1/2
O	Front Rail (1)	3/4 x 1 1/2 - 19
P	Shelves (2)	3/4 ply. - 16 7/8 x 19 3/8
Q	Shelf Edging (2)	3/4 x 3/4 - 19 3/8
R	Back Spacers (2)	3/4 x 4 - 20 1/2
S	Back Panel (1)	1/2 ply. - 19 3/8 x 20 3/8
T	Drawer Front/Back (8)	1/2 x 4 - 6 1/4
U	Drawer Sides (8)	1/2 x 4 - 23 3/8
V	Drawer Bottoms (4)	1/2 ply. - 6 1/4 x 22 7/8
W	False Fronts (4)	3/4 x 7 1/8 - 9

- (4) 3"-dia. Swivel Casters w/Screws
- (4) 23" Center-Mount Drawer Slides
- (4) 1" Cherry Knobs w/Screws
- (8) Spoon-style Shelf Pins
- (4) Magnetic Catches w/Strikes
- (24) #8 x 1 1/4" Fh Woodscrews
- (24) #8 x 1" Fh Woodscrews
- (2) #8 x 2" Fh Woodscrews

CUTTING DIAGRAM

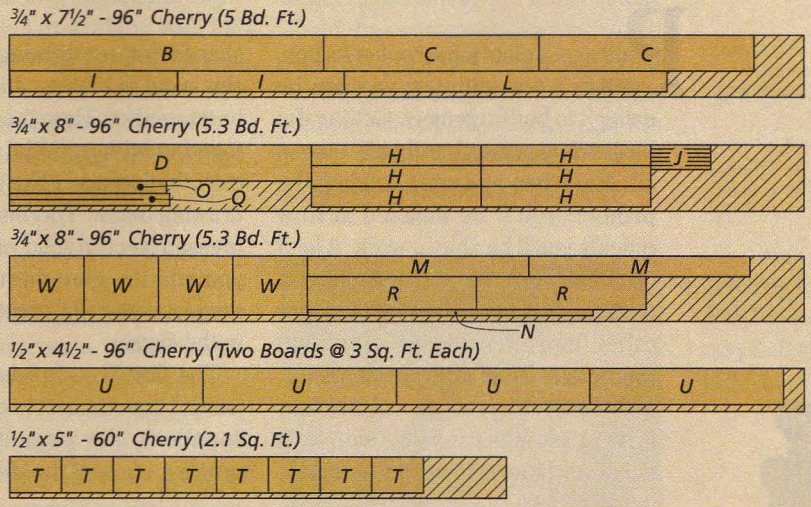

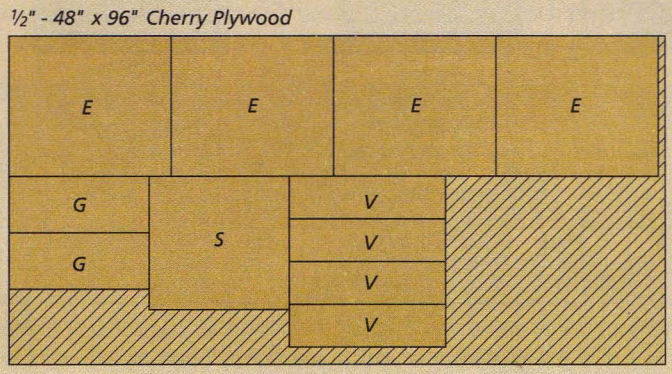

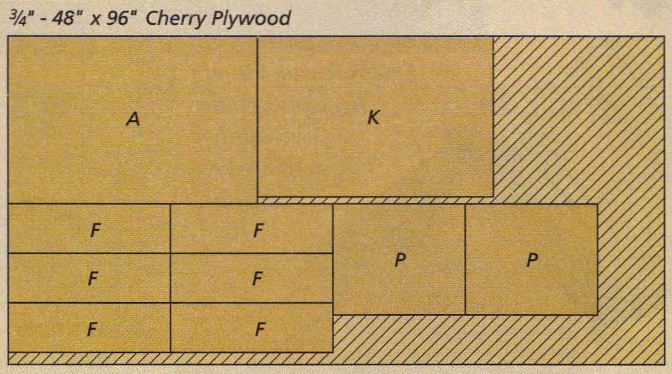

PLATE JOINERY

In terms of sheer speed, nothing beats a plate joiner. You can have a joint cut and assembled in the time it takes just to lay out a traditional joint.

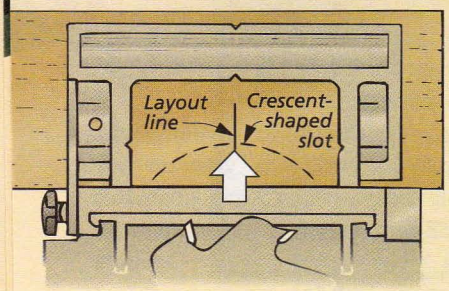

▲ *To cut its slot, the joiner's fence and faceplate are set tight against a workpiece. Then the small circular blade is simply plunged in and out of the wood.*

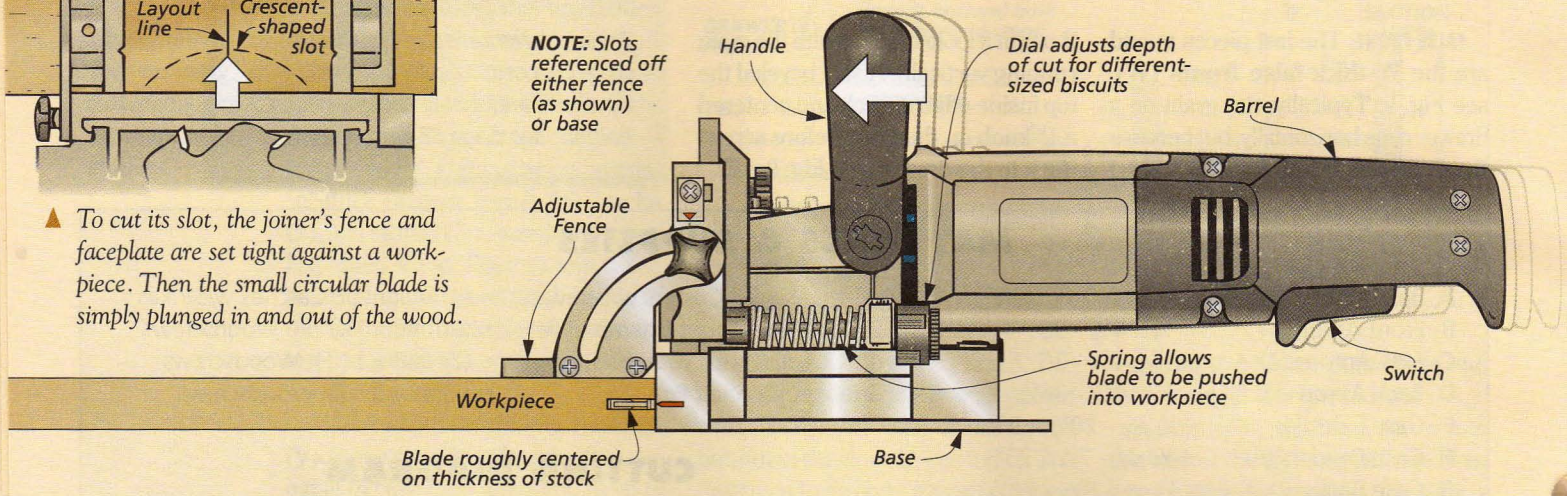

Pull a new plate joiner out of its box, and in a few minutes, you can be using it to build a project. Getting the basics down takes hardly any time at all. And when you start building the project, you'll be amazed at how quickly you'll be able to work. A joint can be laid out, cut, and assembled in minutes — with the same accuracy as other, more traditional joints that might take a half hour to complete.

SIMPLICITY. The reason a plate joiner is so quick is because it's simple. It does one thing — scoop out a circular-shaped slot, see drawings above. This slot is cut in mating workpieces that butt together. Then the joint is glued together with a special spline, a "biscuit" that's shaped like a football, see drawing below. This biscuit is a compressed piece of solid wood. So when you add the glue during assembly, the biscuit swells, creating a tight fit in the slots.

The first time I picked up a plate joiner, I thought it looked and felt (and sounded) like a small right angle grinder. It's as if the grinding wheel was replaced by a small circular saw blade, though you don't actually see this blade — it's covered by the joiner's face plate and fence.

PLUNGING MOTION. But unlike a grinder, the plate joiner works with a quick plunging motion. With one hand gripping the trigger barrel and the other on the handle, you simply butt the fence and face plate against a workpiece and squeeze the trigger, see drawing above. Pushing the handles against the piece compresses a spring and plunges the blade into the

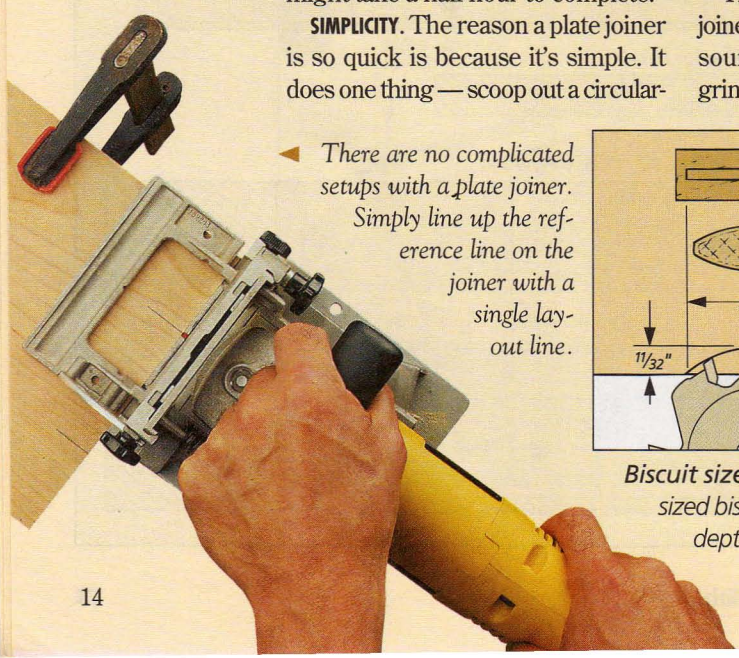

◄ *There are no complicated setups with a plate joiner. Simply line up the reference line on the joiner with a single layout line.*

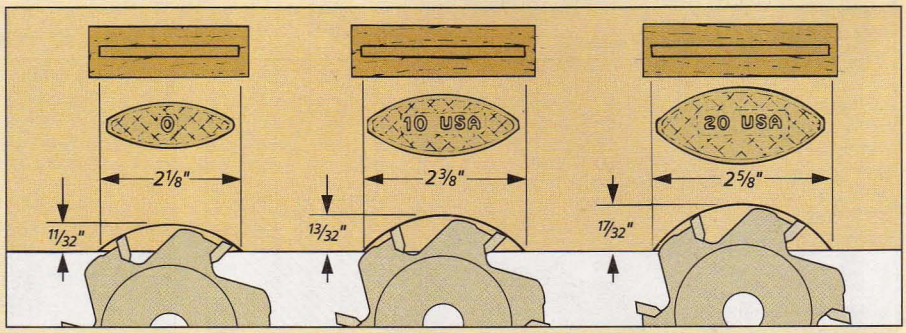

Biscuit sizes. *There are three standard sized biscuits (#0, #10 & #20). Preset depth settings on the plate joiner adjust the depths (and widths) of the slots, which are slightly oversize. The #0 biscuit requires a workpiece about 2¼" wide.*

wood. Although you never see the blade, you know the tool is doing its job by the "whine" of the motor and the clean slot that's left in the piece.

This quick plunging motion is all there is to cutting the slots. But cutting the slot is only one part of the process. You also have to lay out the joint and set up the joiner for the cut. Fortunately, these tasks are almost as quick as cutting the slot.

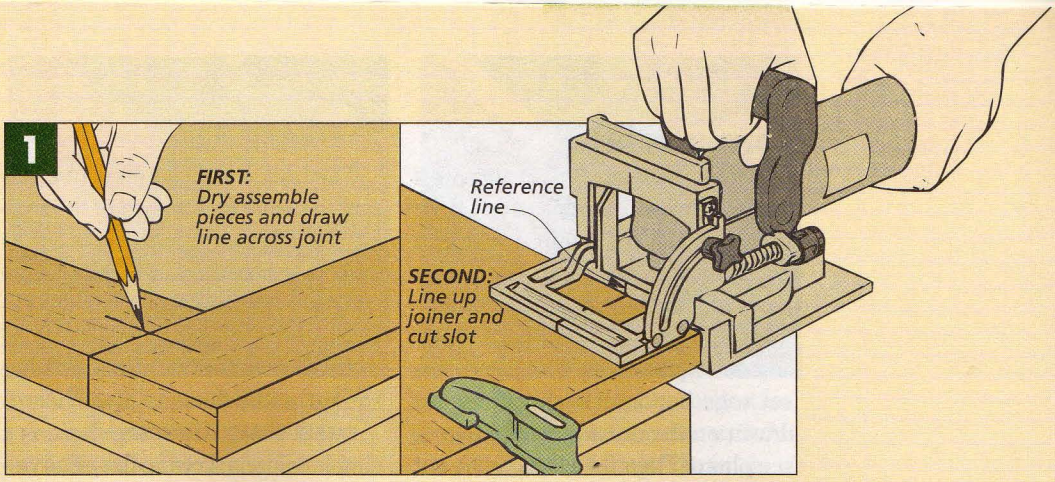

LAYING OUT SLOTS. The layout is as easy as locating the center of each biscuit. And the spacing of the biscuits isn't critical, either. So you don't need any layout tools. Just dry assemble the two pieces and draw a quick line across the joint, see Fig. 1 above. Then when cutting the slots, align the layout line with the reference line on the plate joiner and make the cut, see Fig. 1 and photo on page 14.

If you're like me, you'll lay out the first few joints with the same precision as a hand-cut dovetail. But a biscuit joint isn't a glove-tight fit. The slots are slightly wide and deep to allow for some built-in "breathing room," see lower drawing on page 14. Because of this extra room, you'll be able to adjust the workpieces during assembly to make sure they align.

SETTING UP JOINER. To set up a joiner, you have to set the depth of the slot, center the blade, and occasionally angle the fence. This sounds like a lot more work than it really is. That's because 95% of the time, I'm working with ¾"-thick stock and a square fence, so all I have to do is set the depth of the slot. And even this is easy.

DEPTH OF CUT. There are three sizes of biscuits (see lower drawing on page 14), and the slot depths are all preset. So all you have to do is turn a dial to the right biscuit size, and you're ready to begin cutting the slots.

FENCE HEIGHT. As for the fence, it should be set so the slots are roughly centered on the thickness of the pieces, see drawing at top of page 14. And as I mentioned earlier, the majority of the time I'm working with ¾"-thick stock anyway, so I don't have to adjust the fence very often (and it only takes seconds).

Note: When working with ¾"-thick stock, you can also use the base as a reference. Just be consistent. Don't use the base for one piece and the fence for its mating piece — the two slots may not line up with each other.

FENCE ANGLE. With the depth of cut and fence set, you're ready to cut the slots. However, with some joints, you also need to angle the fence. There are a number of ways to do this depending on your particular model of joiner, see margin photos on page 17. But again, most of the time you won't have to think about this.

These are just some basic points. But before you get started, there are a few simple setups to learn. Over the next couple of pages, I'll talk briefly about the common joints you'll build with your plate joiner, highlighting anything you need to watch out for. Plus, there are a few quick tips I've found useful when working with a plate joiner, see box on page 17.

Frame Joints

Frames are perfect for plate joinery, see photo. A slot is cut in the *end* of one piece and the *edge* of the other, and you don't have to worry about allowing for tenons — the rails and stiles simply butt together. The only limitation you'll run into is with narrow boards. Even with a #0 biscuit, the workpieces have to be at least 2¼" wide, or the slots will cut all the way across the ends. (Note: When laying out narrow pieces, it's a good idea to center the lines exactly.)

To make a frame, first dry assemble each corner and draw a layout line across the joint, see Fig. 1 above. Then clamp each piece down and cut its slot, see Figs. 1 and 2 below.

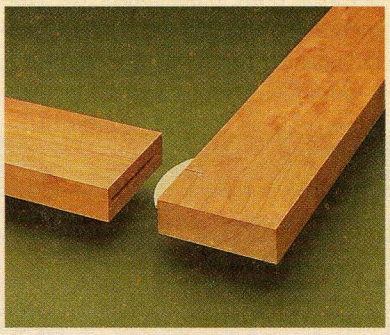

◄ *A strong face frame is quick and easy to build with a plate joiner.*

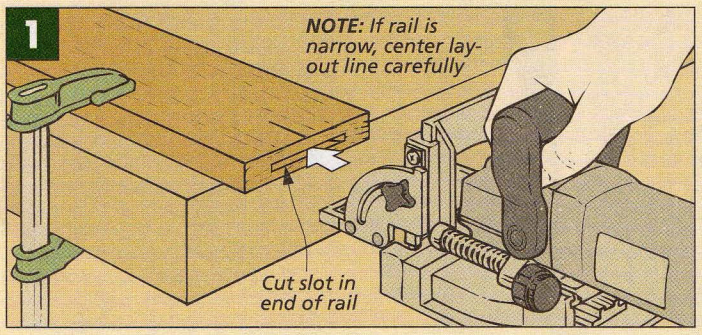

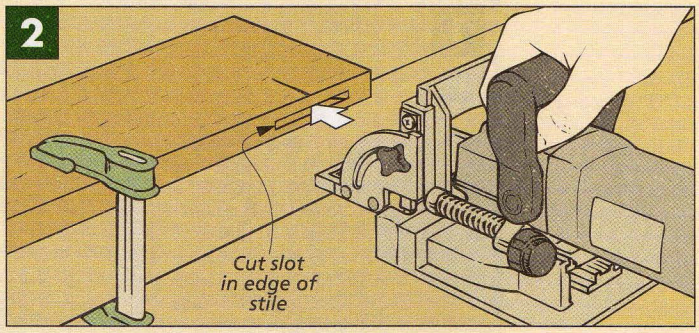

Corner Joint

A corner is also easy to create with a plate joiner. Here, the end of one piece is slotted and butts into the face of the other piece, see photo. But there's more to this than you might think.

LAYOUT. A corner joint begins like any other plate joint. The pieces are set together and layout lines are drawn on the *outside* face and end, see photo. Then the slots can be cut in the end of one piece, see Fig. 1.

The trick comes when you're cutting the slots on the face of the mating piece. Here the fence rests on the end of the board, and it's a bit of a balancing act to keep *both* the fence and face plate tight against piece. It's hard to "feel" whether the joiner is sitting square on the thin end of the board.

BACKER BOARD. However, there is a simple solution. I clamp the piece vertically in a vise, see Fig. 2. And to make the end "thicker," I slip a backer board behind the piece, see Fig. 2a. Then I cut the slots.

LONG WORKPIECES. Unfortunately, this technique won't work when you have long workpieces. You can't stand them on end. So instead, I lay the pieces down and treat them like a T-joint, see the section below. And to support the joiner, I also add a spacer block, see tip box on page 17.

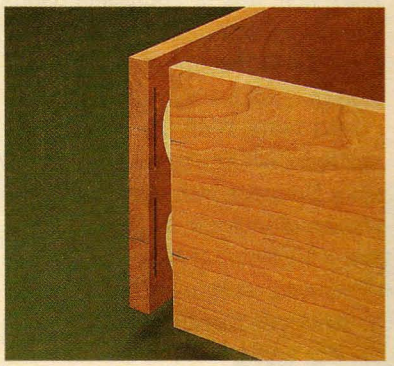

▲ *To join a corner with biscuits, slots are cut in the end of one piece and the face of the other.*

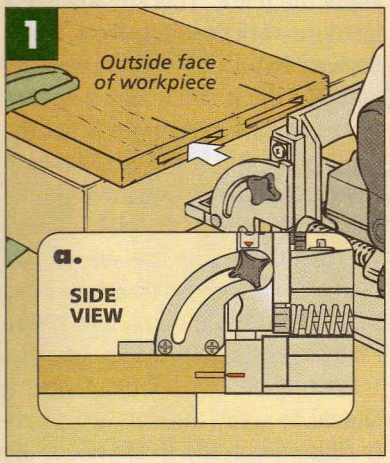

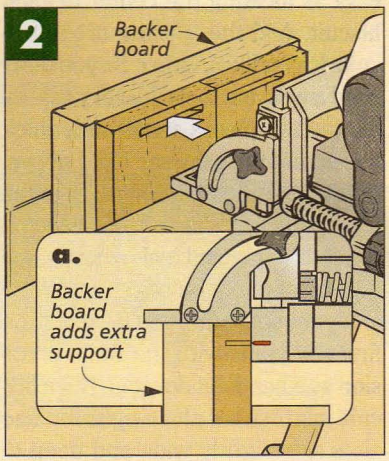

T-Joint

A T-joint has slots cut in the end of one workpiece (the cross piece) and in the center of the other piece (the side), see photo at right. It's the side piece that requires all the work. The reason? There's no edge or corner to reference the plate joiner to. This means you have to "create" a temporary corner to butt the tool against.

LAYOUT. To layout a T-joint, first draw a line to locate the *bottom* edge of the cross piece on the side piece and clamp the cross piece flush with this layout line, see photo at right and Fig. 1 below. Then you can lay out the centers of the biscuits on both the sides and cross pieces. At this point, you're ready to begin cutting the slots.

Note: When joining the sides and shelves on the bookcases, I used a slightly different technique. To speed things up, I clamped the two sides together, added an auxiliary fence, and cut the slots in both sides at the same time, refer to Fig. 2 on page 21.

USE BASE. A T-joint is unique in another way. You can't use the joiner's fence to reference the cuts on the side pieces — so you can't use the fence on the cross pieces either. Instead, the base is used for both. First, set the base on the side piece and cut the slots in the end of the cross piece, see Fig. 1 below. Then to cut the slots in the face of the side piece, simply stand the joiner up and set its base tight against the cross piece, see Fig. 2.

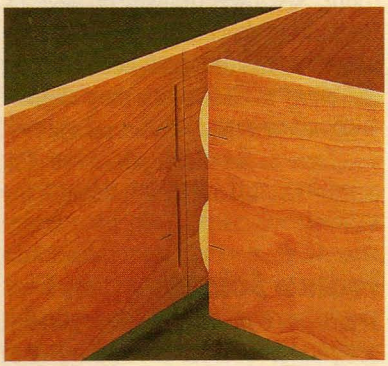

▲ *To cut the slots in the side piece of a T-joint, you'll need to create a temporary corner for the joiner.*

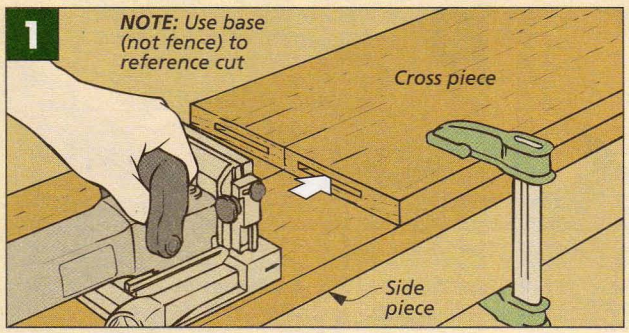

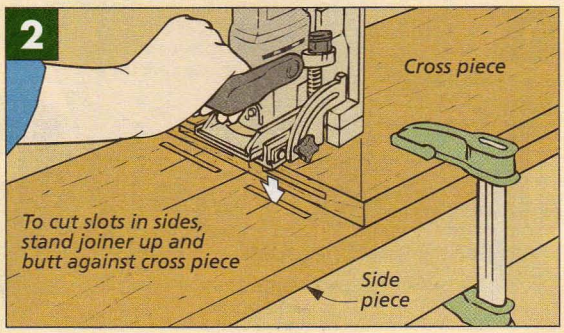

Miter Joints

Because there's no end grain visible, I like the clean look that's created by miter joints. But it's nice if they can be reinforced. Here, a plate joiner really earns its keep. Adding a biscuit is a really quick way to strengthen a miter joint, whether the workpieces are part of a frame (like the edging around the top of the TV cart) or part of an apron (like the base of the TV cart), see the photos at right.

MITERED FRAME. Using biscuits to join a mitered "frame" (where the pieces are mitered across their widths) is almost identical to using them to build a face frame, see left photo. You don't even have to change the angle of the fence — the jointer cuts straight into the mitered end, see Fig. 1 at right. The only difference is that the slots are cut in the ends of both pieces.

Another benefit is that because a 45° miter is longer than the width of the workpiece, you can add a biscuit to a narrower piece (down to 1 9/16" wide) without the slot being visible.

BEVELED MITER. Instead of being mitered across the *face*, a workpiece can also be beveled across the *ends* (as on the base of the TV cart), see right photo above. This means you may have to adjust the fence to 45°, see margin photos at right. There are two ways a plate joiner fence will tilt, depending on the model. Some sit on the face of the workpiece, straddling across the inside corner, see lower margin photo. But I prefer to have the joiner trap the point of the workpiece, see Fig. 2 and upper margin photo. It feels much more "secure."

The thing that's critical when cutting a slot into the beveled end of a workpiece is the position of the fence. Instead of centering the slot on the thickness of the piece, I set the fence so the slot is closer to the *inside* corner, see Fig. 2a. This way, you can use a larger biscuit without worrying about "blowing" through the outside face with the plate joiner. W

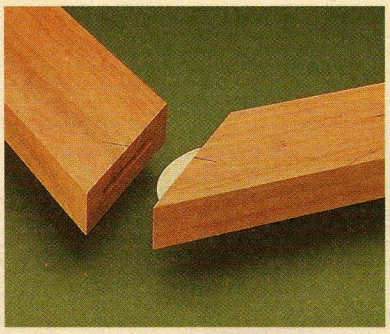

▲ *Adding a biscuit to the ends of mitered pieces is a quick way to strengthen a frame.*

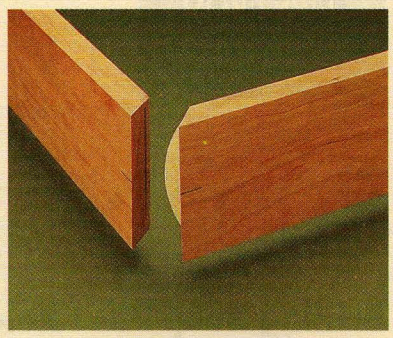

▲ *A beveled miter is also made a lot stronger by a biscuit. But with this cut you have to angle the fence.*

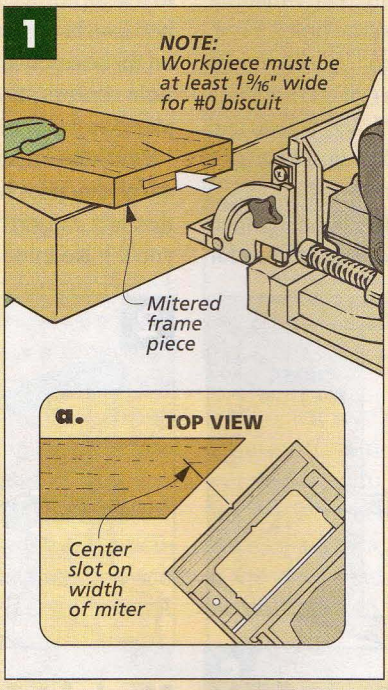

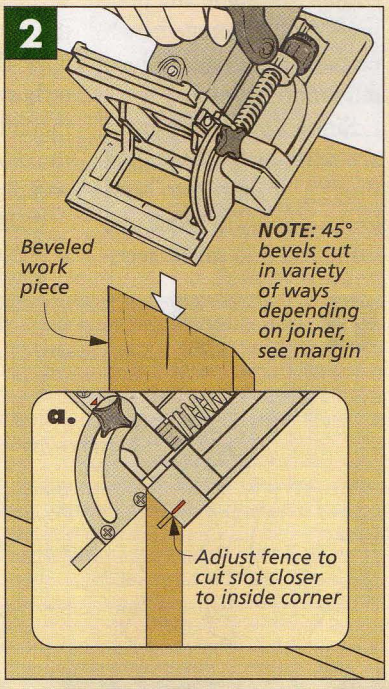

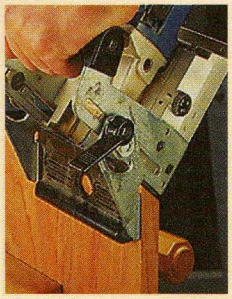

▲ *Many plate joiner fences adjust to trap the point of a 45° bevel.*

▲ *Some plate joiner fences adjust to fit over the inside corner of a 45° bevel.*

PLATE JOINERY TIPS

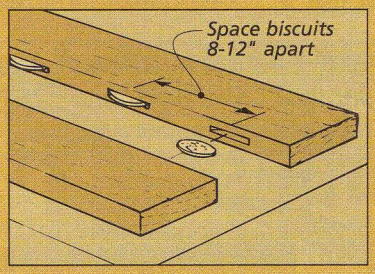

Edge-to-edge joints. *While they aren't needed for strength, biscuits will help keep workpieces aligned when gluing up a long panel or one made up of a lot of boards.*

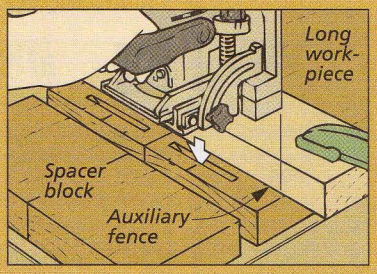

Long corner joints. *To cut slots near the end of a long piece, the joint is treated like a T-joint, see page 16. Plus, a spacer block is used to provide extra support for the joiner.*

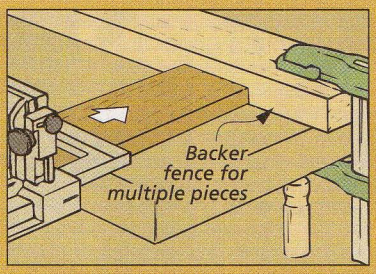

Securing multiple pieces. *With multiple pieces, you can save time by clamping down a backer fence to push the pieces against so you don't have to clamp each one separately.*

SHOP NOTES

Drilling Deep Pilot Holes

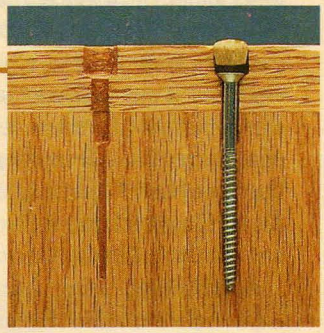

Normally, I don't give much thought to drilling pilot holes. But when it comes to drilling the pilot holes for the storage bench on page 30, it pays to be a little more careful.

Since the screws used are fairly long (2½"), and they're going into end grain, it's easy to break one off if you don't drill accurately-sized pilot holes.

THREE HOLES. Drilling the pilot holes for the bench actually involves drilling three separate holes. First, a ⅜"-deep, ⅜"-dia. counterbore is drilled to accommodate the screwhead and the wood plug, see Fig. 1 and photo at right.

SHANK HOLE. Next, I drilled a 3/16"-dia. shank hole for the unthreaded portion of the screw. Normally, a shank hole is only drilled in the top (first) piece. But because of the long shanks on these screws, the shank hole enters the second piece as well, see Fig. 1a.

PILOT HOLE. Finally, I drilled a 3/32"-dia. pilot hole. Since this is a rather deep hole, you'll have to unclamp the workpieces to drill the hole to the proper depth, unless you're endowed with an extra-long drill bit, see Figs. 2 and 2a. W

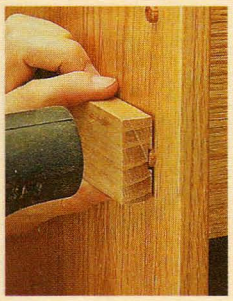

▲ *To insert the dome-shaped plugs, use a piece of scrap with a 3/32"-deep dado cut in it.*

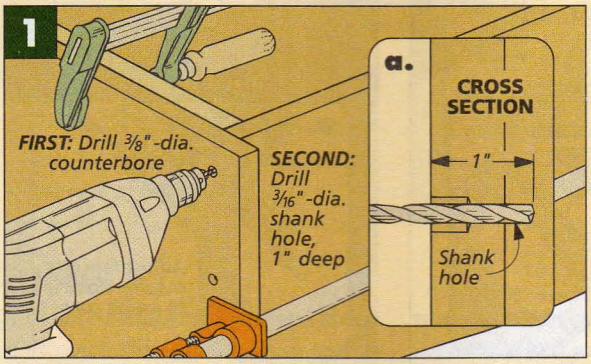

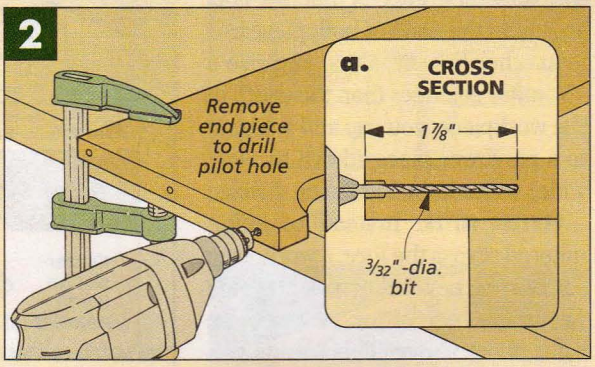

ANILINE DYES

When it came to staining the trim for the TV stand, I decided to use a water-based aniline dye. This type of dye doesn't fade like oil-based dyes. To make the dye as black as possible, I doubled the concentration when mixing it up.

The only drawback to water-based dyes is that they tend to raise the wood grain. To get around this problem, I like to raise the grain with water beforehand and then sand it smooth before applying the dye, see photos.

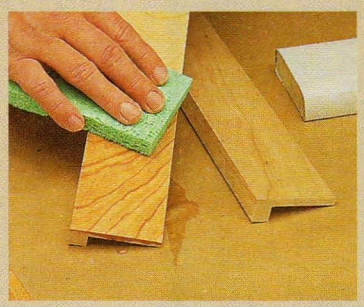

1 *To raise the grain of the wood, use a damp sponge to moisten the surface. Then sand lightly to knock off the "whiskers."*

2 *Brush on the first coat of aniline dye. If the grain raises again, sand it down lightly before applying the second coat.*

Straight Cuts Between Profiles

After you've cut the profile on the base pieces of the TV stand with a sabre saw, you still have to smooth them out. The curves can be sanded with a drum sander. But how do you clean up the straight portion of the profile?

One way is to use a router and a pattern bit. (A pattern bit has a bearing above the cutter.)

Simply clamp a straightedge along the layout line of the profile. Then trim the profile flush, see Fig. 1.

Shop Note: You could also do this on a router table using a flush trim bit. W

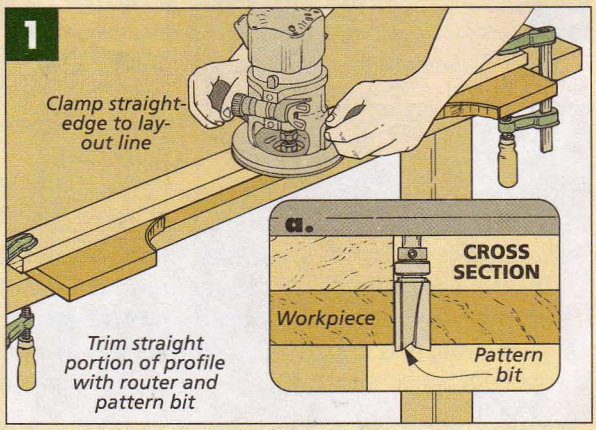

Biscuit Alternatives

Biscuits are a quick and easy way to join two workpieces. But if you don't have a plate (biscuit) joiner, you can still make the TV stand on page 6 — you'll just need to make some modifications when it comes to the joinery, see drawing at right.

SPLINES. One thing you can do is substitute splines for biscuits. This is pretty straightforward when joining two pieces at a right angle, like the case sides and the dividers of the TV cart, see detail 'b.'

Here, you simply rout or cut a dado across the face of the side panel with a straight bit, see Fig. 1.

Then with a slot cutting bit, rout a matching slot in the end of the shelf, see Figs. 2 and 2a.

Now just cut a spline out of 1/4" hardboard to fit in the slots. Shop Note: When cutting the spline, make it slightly narrower than the combined depth of the slots so it doesn't bottom out.

SPLINED MITERS. When constructing the top for the TV cart, splines can also be used in place of biscuits to join the edging to the top panel, see detail 'a.'

But to make the mitered corner joints, you'll need to rout a stopped groove on the mitered end of each piece, see Fig. 3. Then just cut a spline to fit in the grooves, see Fig. 3a.

GLUE BLOCKS. The one place where it's not really practical to use splines in place of biscuits is in the mitered corner joints on the aprons of the cart, see detail 'c.'

If you were to cut slots on the mitered ends of the aprons for a spline, the ends of the slots would be visible from the top. So here, you can simply glue the corners together.

But to strengthen the joint, you might want to add a glue block to the back of each corner to provide more gluing surface. W

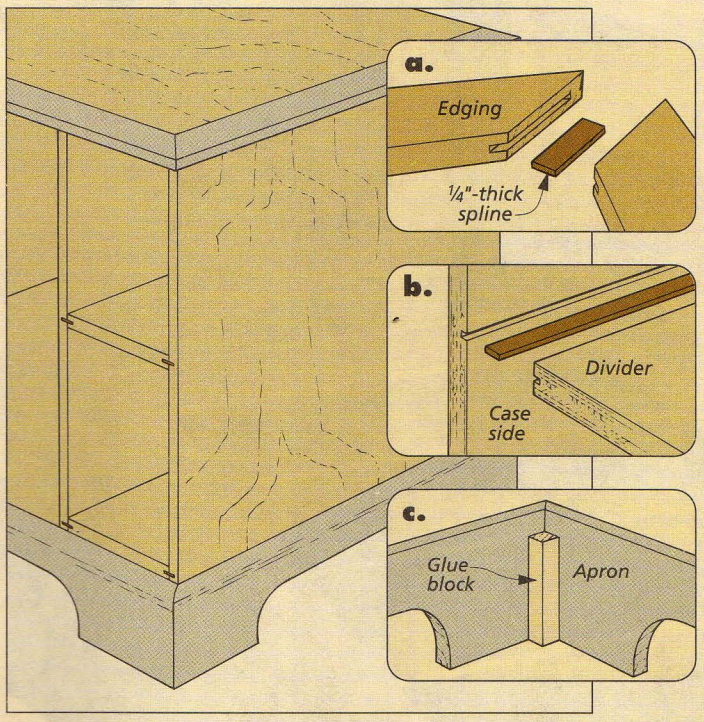

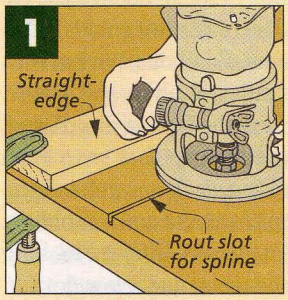

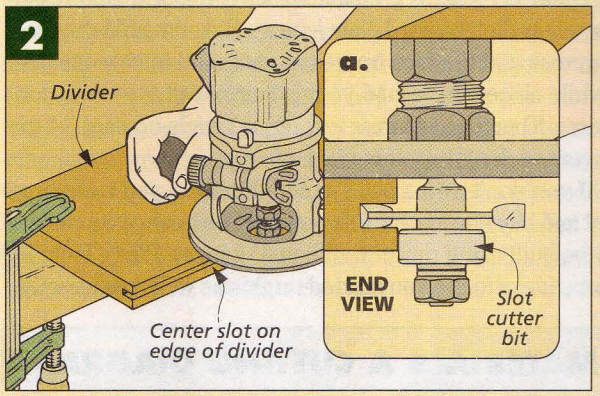

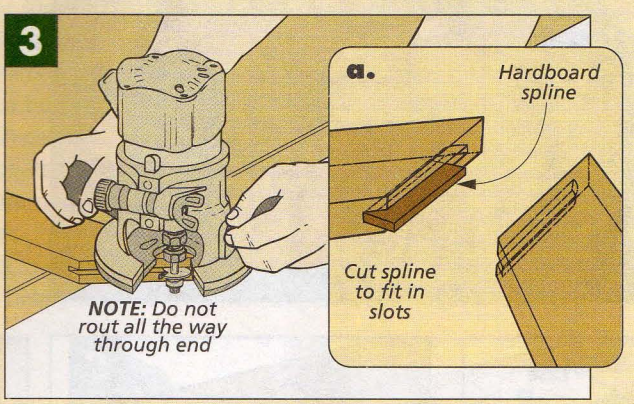

Face Frame without Biscuits

Splines can also be used in place of biscuits for most of the joinery in the bookcases as well. The only exception is when it comes to joining the rails and stiles of the face frame.

Here, I would suggest using a traditional stub mortise and tenon joint, see drawing at right. A mortise and tenon will help lock the rails and stiles together tightly, giving the face frame the strength it needs to prevent the bookcase from racking.

The only thing to be aware of is that when cutting out the parts for the bookcase, you'll have to cut the rails slightly longer to allow for the tenons, see detail 'a.' W

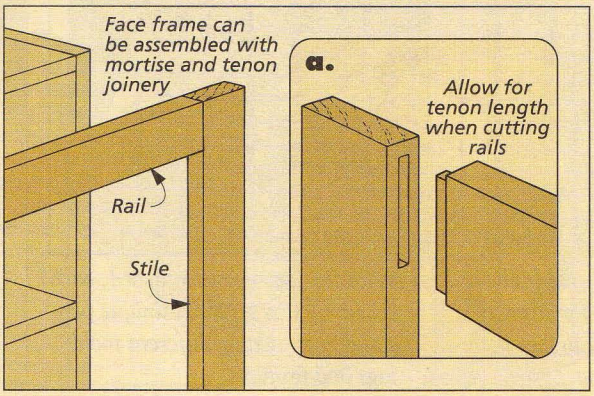

STORAGE PROJECT

THREE BOOKCASES

We started with one basic "case" and added some unique details to end up with three distinct projects.

As soon as we decided to feature a bookcase in this issue, I was flooded with suggestions. One person wanted traditional oak. Another was hoping it would be "country pine." And I was thinking about a simple bookcase made out of maple.

Instead of building only one of these bookcases, we decided to feature all three. The reason we could do this was because they all start the same. Each one started with the same basic "case" made up of sides, shelves, and a back. At that point, the only difference was the type of wood used.

The next step was to add the elements that gave each bookcase its unique appearance. First, each one got a slightly different face frame. Then a top panel and some molding. In the end, we were able to create three different-looking bookcases simply by changing the wood and a few details.

These bookcases go together fairly quickly. One reason for this is that we used plate joinery. Biscuits hold the cases together and the face frames as well. And in case it's been awhile since you've had your joiner out of the case, don't worry. There's a separate technique article on page 14 that covers each of the joints used.

If you don't own a plate joiner, don't feel you need to go out and buy one just for this project. The bookcases can easily be built using more "traditional" joinery. We've included some ideas to get you started on this as well, see page 19.

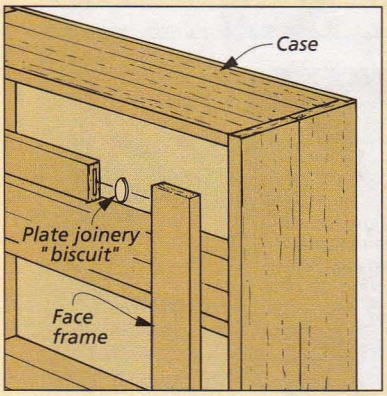

▲ *After the basic "case" was built, a face frame was added for strength. Plate joinery was used to join both the case and face frame.*

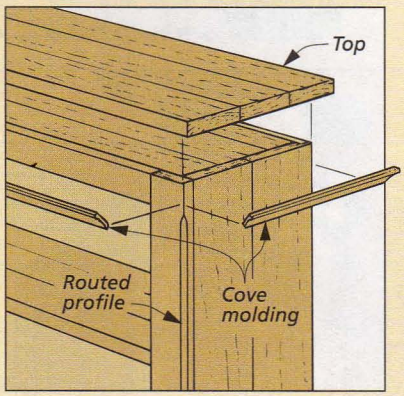

▲ *With the face frame attached, each bookcase was given its unique personality by adding different moldings and profiles.*

MATERIALS & CUTTING DIAGRAM

CASE MATERIALS (COMMON TO ALL BOOKCASES)

A	Sides (2)	¾ x 11¼ - 55¾
B	Shelves (5)	¾ x 11 - 34½
C	Back (1)*	¼ ply. - 35½ x 51¾
D	Filler Blocks (2)	½ x ¼ - 4

• (46) #16 x ¾" Wire Brads

*On the country pine bookcase, this is beaded paneling (though you can substitute bead board planks).

¾" x 6" - 72" (Four Boards @ 3 Bd. Ft. Each)

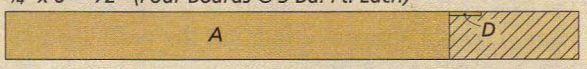

¾" x 6" - 72" (Five Boards @ 3 Bd. Ft. Each)

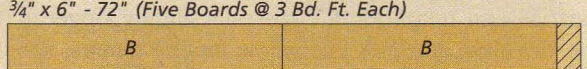

Basic Case Construction

Underneath the face frames and moldings of these bookcases is a simple case: solid wood sides connected with five shelves and a back, see Case Exploded View. The pieces are pretty much the same no matter which bookcase you're building.

GLUE UP PANELS. The first task is to tackle the solid wood panels. The two **sides (A)** and five **shelves (B)** are all glued up from 3/4"-thick stock.

After the panels have been planed flat, they can be cut to size. Accuracy is important here. If the panels aren't consistent, the case won't end up square. So to help with these long panels, I used a simple panel cutting jig. (See page 27 for more on this.)

The sides are 1/4" wider than the shelves. This extra 1/4" is for the back, so I cut a rabbet along the back edge of each side to hold it, see detail 'a.'

Note: With the oak and maple cases, I used plywood for the back (slightly under 1/4"). But for the pine bookcase, I purchased beaded pine plywood that was almost 3/8" thick.

CUT SLOTS FOR BISCUITS. At this point, the slots for the biscuits can be cut. With the side panels, the key thing is that the opposing slots align so the shelves will be level when the case is assembled. To ensure this, I clamped the sides back-to-back. Then I laid out the bottom edge of each shelf and clamped a straightedge along these lines, see Figs. 1 and 2.

This straightedge becomes the "corner" that the plate joiner butts against, see Fig. 2. I cut three slots in each side so the joint would be plenty strong when the shelves were loaded down with books.

When the slots are cut in the sides, matching slots can be cut in the ends of the shelves. Just like the sides, you'll use the base (not the fence) of the plate joiner to reference the cuts.

Now the case can be dry assembled, and a **back (C)** can be cut so it fits between the rabbets and is flush with the top and bottom shelves, see Case Exploded View.

With the back cut to size, it's time to find someone to help you get the case assembled — it's a big job, and you have to work quickly. To buy myself a little extra time, I used liquid hide glue. And I simply set the back in place to hold everything square.

After the glue dries, you can nail the back in place. Shop Tip: It's awkward to apply finish to the back after it's installed, so I do this before nailing the back in place.

When the back is on, the last thing to do is fill in the rabbets below the plywood panel. I simply cut two small **filler blocks (D)** to size and glued them in place, see detail 'b' above.

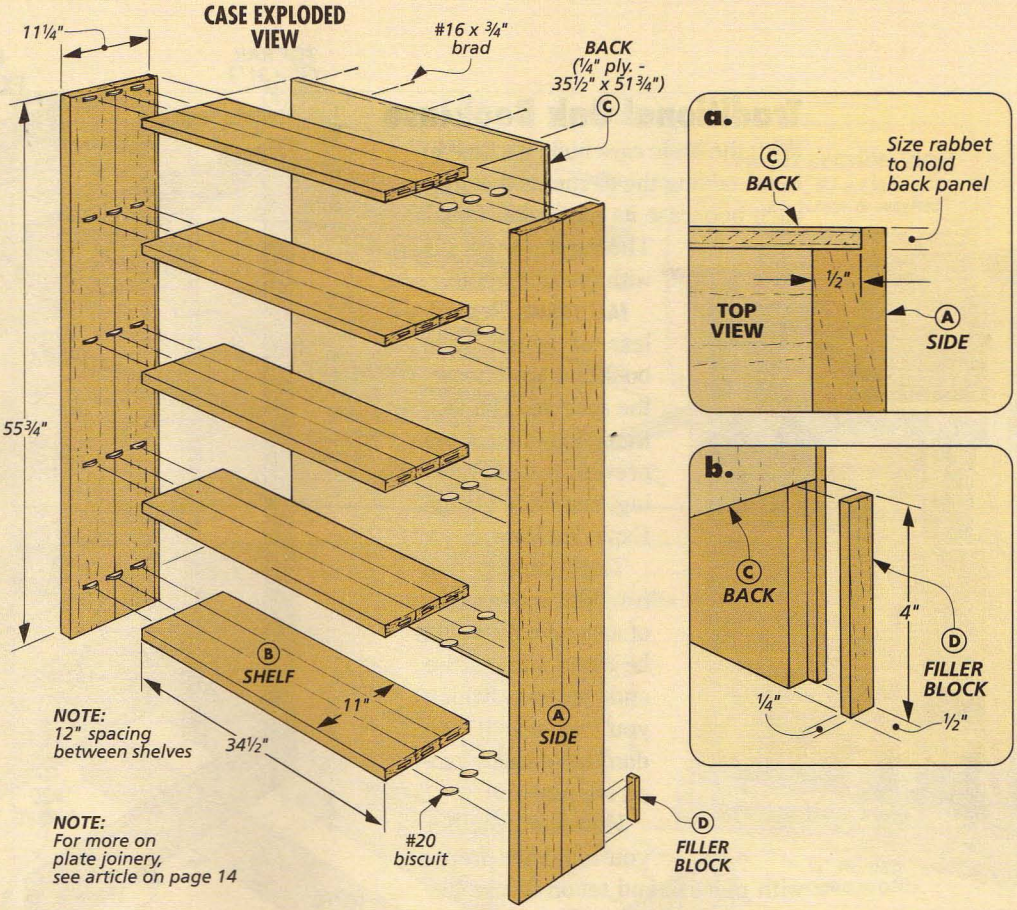

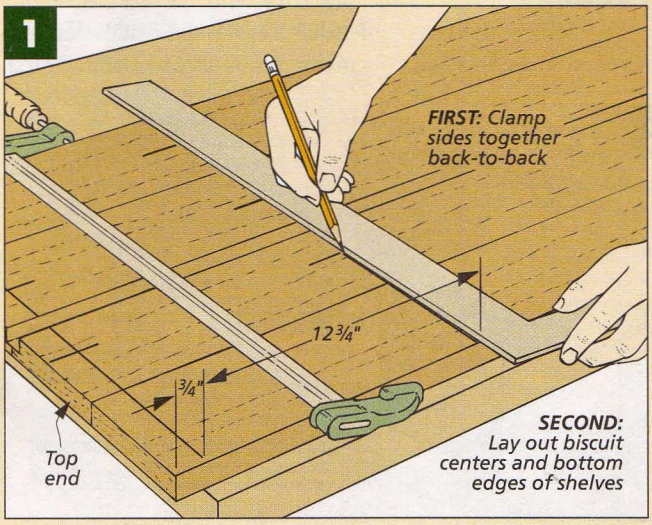

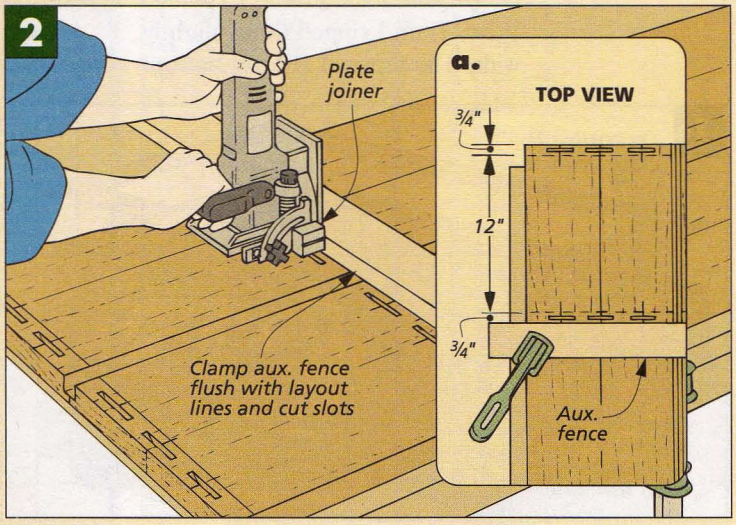

Traditional Oak Bookcase

With the basic case built, it's time to begin adding the elements that give each bookcase its particular "look." The place to start is with the face frame.

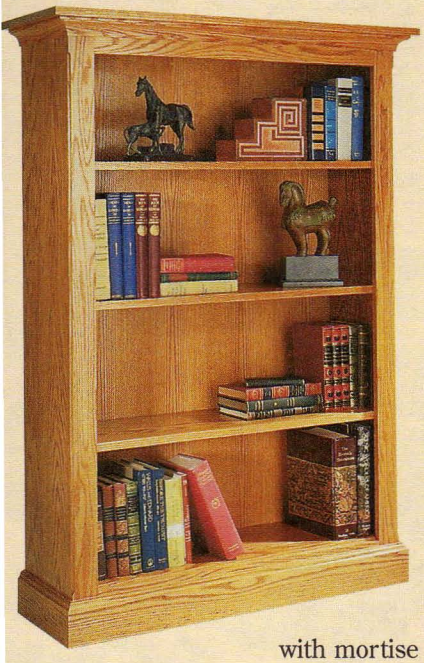

▲ *This traditional oak bookcase is "dressed up" with cove molding and a simple apron.*

FACE FRAME. Regardless of which style bookcase you choose, the case needs a face frame to stiffen it and prevent it from racking, see Face Frame Exploded View.

Traditionally, the two stiles and two rails of a face frame would be joined with mortise and tenons (which you can use if you don't have a plate joiner, see page 19).

However, whether you build the frame with mortise and tenon or use biscuits, you're going to have the same challenge. You have to build a large frame that covers the edges of the case *exactly*. And if the case is even a little out of square, the frame won't be flush even if it is the correct size.

To solve this problem, I like to build the face frame a smidgen wide. For these bookcases, I did this by ripping the stile pieces a hair wide (less than 1/16"), refer to detail 'b' above right. Then after the face frame is glued to the case, the sides of the frame can be trimmed to match the case.

STILES & RAILS. To build the frame, I started by cutting the **stiles (E)** to length, see Face Frame Exploded View. Then I ripped them slightly wide. The **top rail (F)** and **bottom rail (G)** are both cut to finished size.

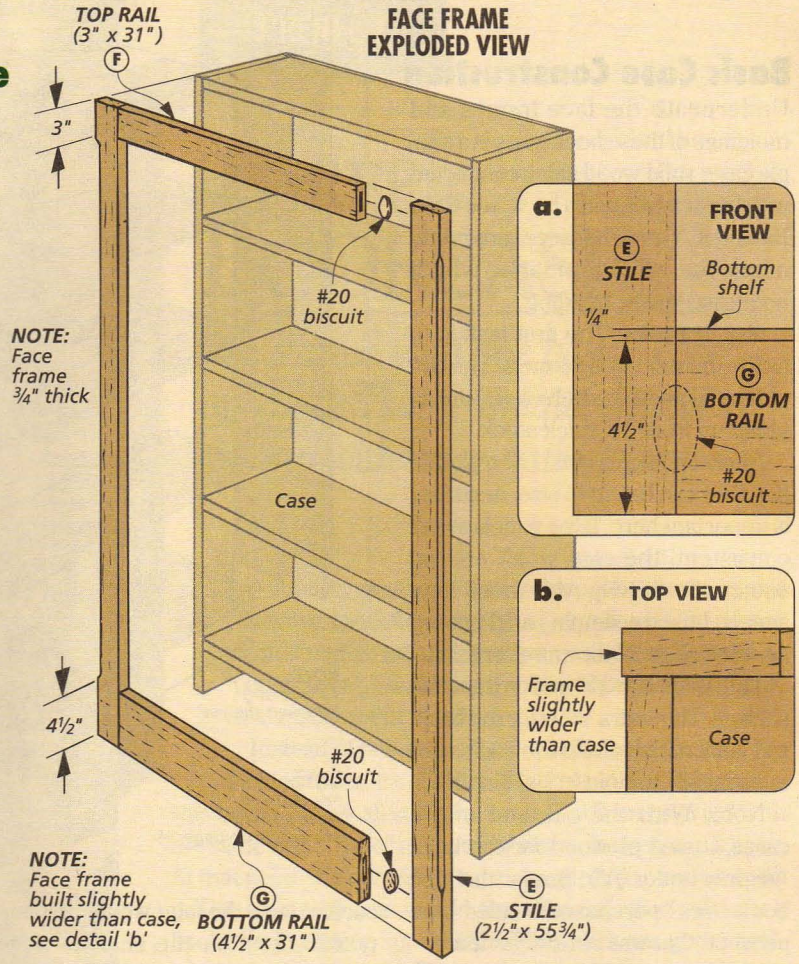

Now you can lay out and cut the slots for the biscuits, refer to the plate joinery article on page 14. (Or you can cut the mortise and tenon joints, see page 19.) Then after the frame is glued together, it can be glued to the front of the case, see Fig. 1.

Note that the bottom rail (G) shouldn't be flush with the bottom shelf, see detail 'a' above. It's top edge ends up ¼" lower than the shelf to create a simple shoulder.

At this point, the sides of the face frame can be trimmed flush. This was a good opportunity for me to get my block plane out and create some shavings, see Fig. 1a.

With the face frame trimmed, the last thing to do is rout a stopped ¼" cove along the outside corners, see Figs. 2 and 2a. This is easy to do with a hand-held router — the base rests secure on the frame. And to stop the coves flush with the rails, I simply transferred their inside edges across the stiles with a square.

TRIM & TOP. With the face frame complete, it's time for the details that really make this bookcase distinct. First,

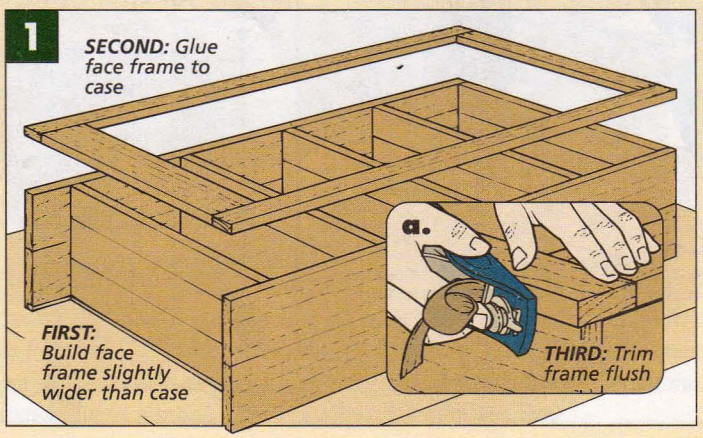

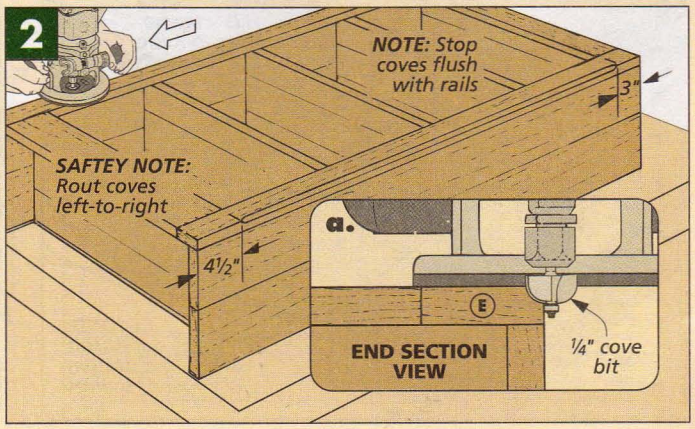

I added the top and dressed it up with cove molding. Then I added an apron around the base.

TOP PANEL. Before you can add the cove molding, the ¾"-thick panel for the **top (H)** needs to be glued up and cut to size (14" x 40"), see Fig. 3. Then to allow for wood movement, I drilled oversize shank holes and used round-head screws and washers, see Fig. 3a. (The top is centered side-to-side and flush with the back.)

COVE MOLDING. With the top in place, you can begin working on the cove molding underneath the top, see Fig. 3. (I found the 2"-wide molding at a local home center.)

Cove molding "leans" forward, so it requires compound miters. This typically means angling the miter gauge *and* tilting the saw blade. But to make the setup much easier, I like to tilt the *molding* and leave the blade square to the table. I do this with a simple cradle, see box below.

The other trick to cutting compound miters successfully is to put your tape measure away. Instead, cut the front corner of the sides and then hold it up to the case and mark the back edge. When it's cut to length, repeat this procedure for the other side piece of molding. Then clamp both sides in place, and sneak up on the final length of the front piece until it fits between the sides perfectly. When all the pieces are cut, I nailed the molding to the top, see Fig. 3a.

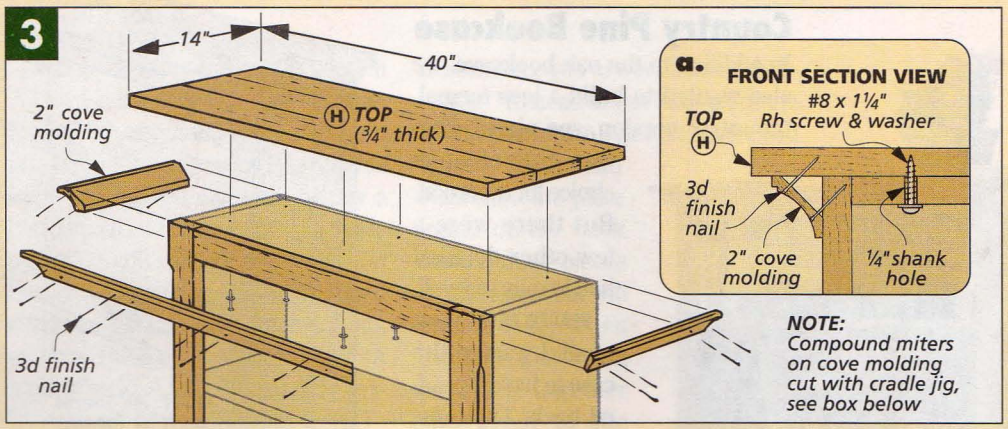

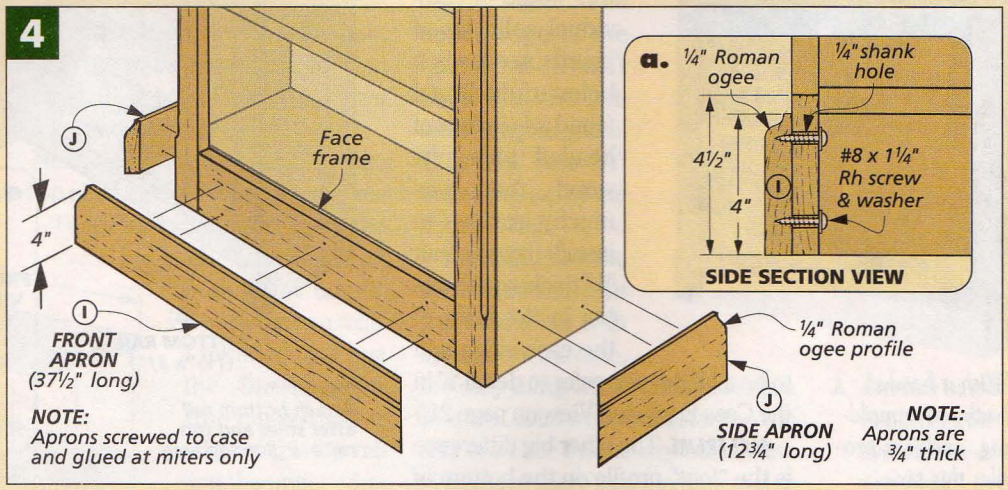

BASE APRON. With the cove molding on, the last pieces to add are the **front (I)** and **side aprons (J)** around the base, see Fig. 4. Unlike the cove molding, these pieces are joined with simple miters. But before cutting the miters, you need to rout the ogee profile along the top edge, see Fig. 4a.

I attached the base aprons to the case the same way I attached the top. I allowed for wood movement by drilling oversize (¼"-dia.) shank holes in the case sides and using round-head screws with washers, see Fig. 4a. But to keep the miters tight, I applied glue to each front corner.

COVE MOLDING CRADLE JIG

To simplify the table saw setup for cutting cove molding, I leave the saw blade square and use a simple cradle that attaches to the miter gauge and holds the *molding* at an angle, see drawing and detail 'a.'

There are two important things to note. First, the molding should always be placed *upside down* in the jig. Also, you'll still have to move the miter gauge from one side of the blade to the other, depending on the corner being cut.

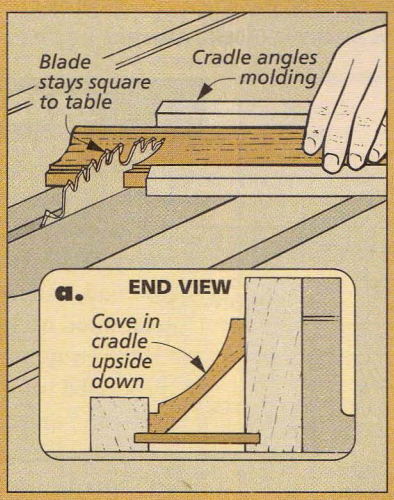

OAK BOOKCASE

E	Stiles (2)	¾ x 2½ - 55¾
F	Top Rail (1)	¾ x 3 - 31
G	Bottom Rail (1)	¾ x 4½ - 31
H	Top (1)	¾ x 14 - 40
I	Front Apron (1)	¾ x 4 - 37½
J	Side Aprons (2)	¾ x 4 - 12¾

- (20) #8x1¼" Rh Screws
- (1) 2" Cove Molding (6ft.)
- (20) #8 Flat Washers
- (16) 3d Finish Nails

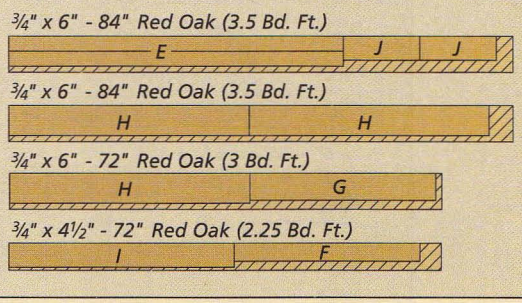

Country Pine Bookcase

In addition to the oak bookcase, we also wanted to build a less formal, "country" version, see photo. Pine was the obvious choice for the wood. But there were a few other details I had in mind as well.

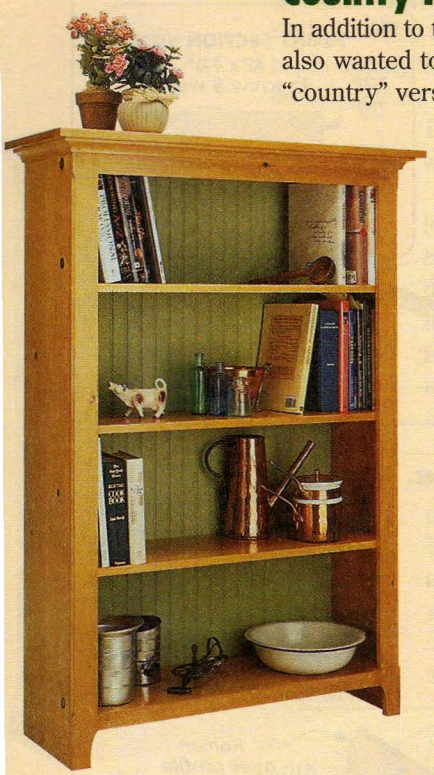

▲ *With a beaded back, cove molding, and foot profile, this pine bookcase will look at home in any "country" setting.*

BEADED BACK. First of all, I wanted the case to have a beaded back. Typically, this would be individual solid wood boards, see the box below right. But I found a 4x8 sheet of beaded pine plywood that was much easier to install. (It was about 3/8" thick, so the rabbet in the back of the case sides had to be a bit deeper, refer to detail 'a' in the Case Exploded View on page 21.)

FACE FRAME. The other big difference is the "foot" profile on the bottom of the frame. This profile required a few adjustments to the building process.

The size of the face frame is the same as the oak bookcase — except for the bottom rail. I started by cutting the **stiles (E), top rail (F)**, and **bottom rail (G)** to size. The bottom rail is only 1½" wide, which is too narrow to use biscuits. So I used biscuits to create a U-shaped assembly with the stiles and top rail.

But *before* gluing these three pieces together, I created the feet on the bottom, inside edges of the stiles. I dry assembled all the rails and stiles and drew the pattern out on each stile, see detail 'a' above. Then the profile can be cut with a band saw and sanded smooth with a drum sander.

The bottom rail is attached *after* the U-shaped assembly has been glued to the case. (I did dry clamp the bottom rail in place to keep the frame square.) Then the bottom rail can be glued flush with the top of the bottom shelf. (It should also align with the "feet" on the stiles, see detail 'a.')

TOP & COVE MOLDING. After the frame is trimmed flush to the case and the cove profile is routed on the outside edges, all that's left is to add the **top (H)** and some 2" cove molding, see Exploded View. Again, to cut the compound miters for the molding, I used a cradle jig, see the box on page 23.

FINISH. To give the pine a warm, golden tone, I applied a wood conditioner (to reduce any blotching) and stained the wood a honey maple color. Then I added a few coats of a wipe-on finish. (I had painted the beaded back before attaching it to the case.)

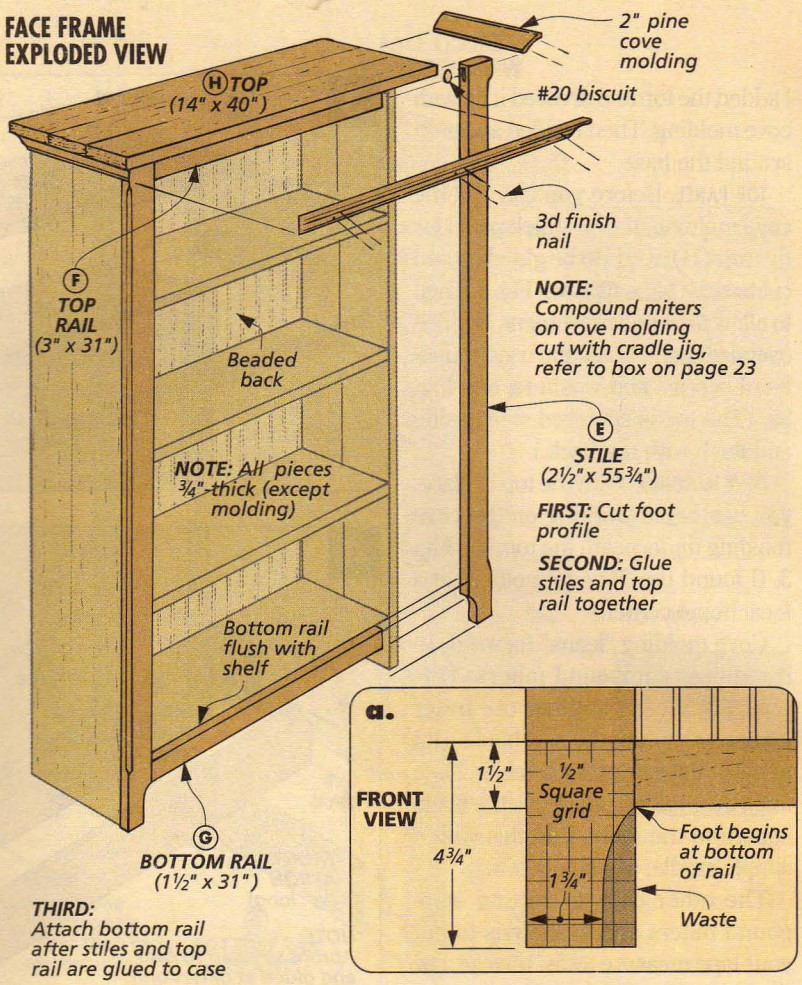

PINE BOOKCASE

E	Stiles (2)	¾ x 2½ - 55¾	• (6) #8 x 1¼" Rh Screws
F	Top Rail (1)	¾ x 3 - 31	• (6) #8 Flat Washers
G	Btm. Rail (1)	¾ x 1½ - 31	• (1) 2" Cove Molding (6ft.)
H	Top (1)	¾ x 14 - 40	• (16) 3d Finish Nails

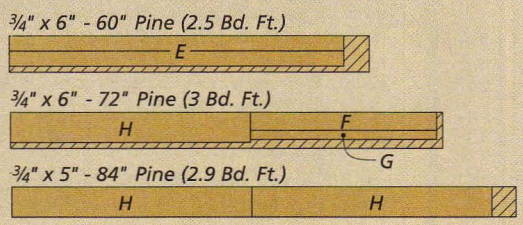

BEADED BOARD BACK

If you can't locate any beaded pine plywood for the case back, don't worry. Before there was plywood, cabinets had solid wood backs.

One way to allow these solid wood backs to expand and contract freely was to use "beaded" boards, see photo. These had interlocking tongues and grooves on their edges, which held the back together but still allowed the pieces to expand and contract.

Classic Maple Bookcase

The last bookcase I built was made out of maple, see photo at right. Of the three bookcases, this one is the simplest to build. There's no molding to install at the top or bottom — just a face frame (with a curved top rail) and a glued-up panel on top, see Face Frame Exploded View.

FACE FRAME. After the maple case had been assembled, I began work on the face frame, see Face Frame Exploded View. What's unique about this frame is that the stiles and rails are different thicknesses. I cut the **stiles (E)** from ¾"-thick stock, but the **top rail (F)** and **bottom rail (G)** are only ½"-thick. This way, the stiles stand proud like a couple of simple columns.

When the stiles and rails have been cut to size, the curve can be cut on the top rail (F), see detail 'c' below. There are a couple ways you can lay out this large curve. You can either draw a half pattern and trace it onto the workpiece. Or you can put a few nails on the *back* face of the rail blank, bend a flexible straightedge against them, and trace along this straightedge. (A narrow strip of ⅛" hardboard is flexible enough for a curve this large.)

When the curve is laid out, you can cut it with a band saw or sabre saw. Stay to the waste side of the line and then sand it smooth with a drum sander in the drill press.

Next, a ⅛" roundover can be routed on all of the face frame pieces, see Face Frame Exploded View. The stiles are routed on both front edges. But on the two rails, I rounded over just the *inner* edges (the curved lower edge of the top rail and the upper edge of the bottom rail).

At this point, the face frame is ready to be assembled with biscuits. Here, the different thicknesses force you to work a little "backwards." Instead of working off of the front faces of the stiles and rails, you have to lay out and reference the plate joiner on the back faces of these pieces — the ones that will end up flush. Then the face frame can be glued together and glued to the case. Note: The upper edge of the bottom rail (G) isn't flush with the bottom shelf, see photo. This rail sets ¼" below the top of the bottom shelf.

TOP PANEL. After the face frame has been trimmed flush with the sides of the case, the only thing left to do is glue up a ¾"-thick solid wood panel for the **top (H)**, see Face Frame Exploded View.

Because there's no molding underneath this panel, it's simply cut to overhang the front and sides 1". (It's flush with the back.) Then on its front and side edges, I routed a ⅛" roundover, just like the ones on the face frame.

Finally, when screwing the top to the case, I drilled oversize ¼"-dia. shank holes to allow the panel to expand and contract, see detail 'a.'

To finish the bookcase, I didn't apply any stain. Instead, I wiped on three coats of a "satin" finish. W

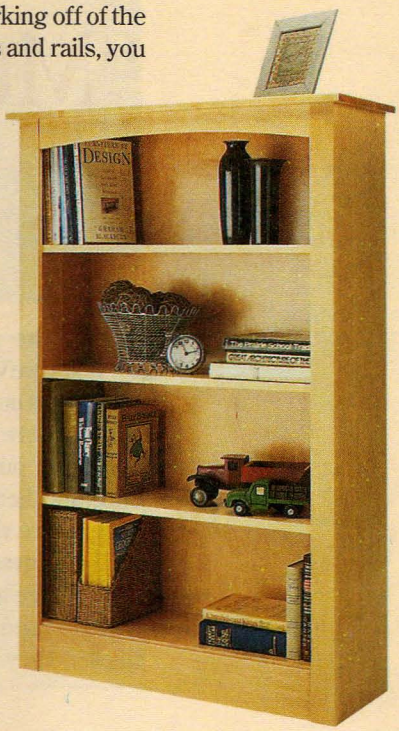

▲ *On this maple bookcase, the rails are thinner and "set back" from the stiles.*

FACE FRAME EXPLODED VIEW

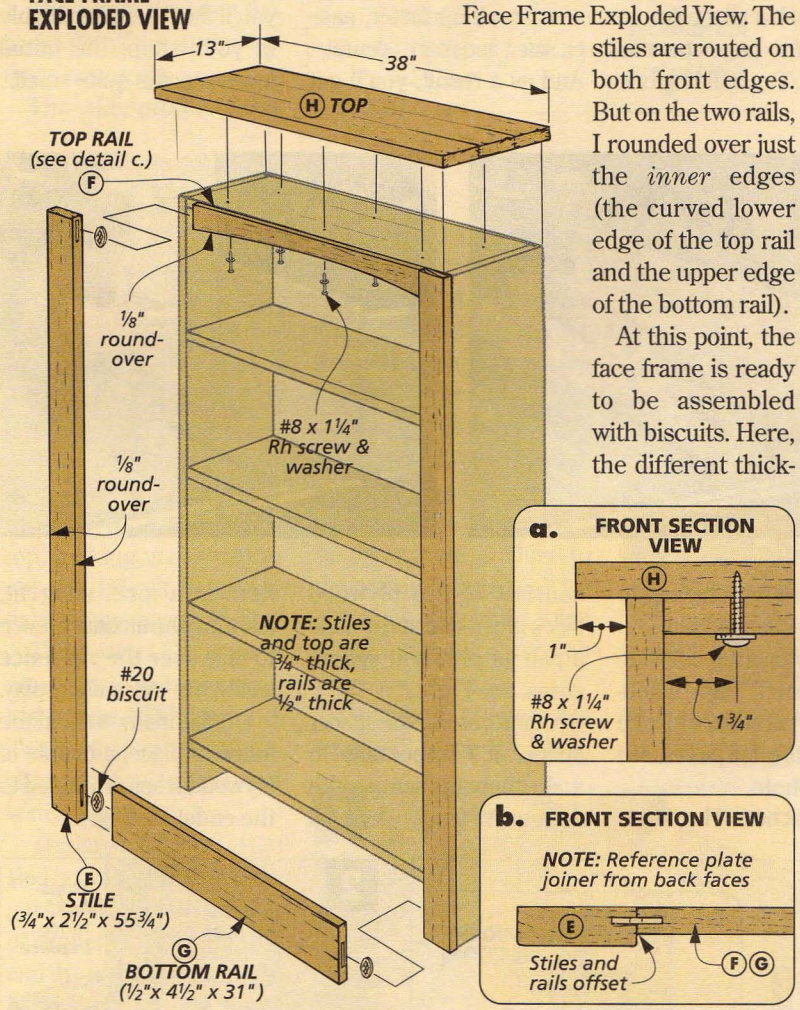

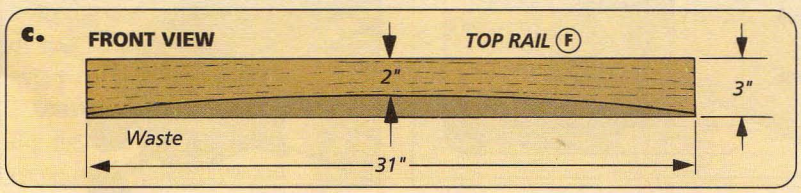

MAPLE BOOKCASE

E	Stiles (2)	¾ x 2½ - 55¾
F	Top Rail (1)	½ x 3 - 31
G	Btm. Rail (1)	½ x 4½ - 31
H	Top (1)	¾ x 13 - 38

- (6) #8 x 1¼" Rh Woodscrews
- (6) #8 Flat Washers

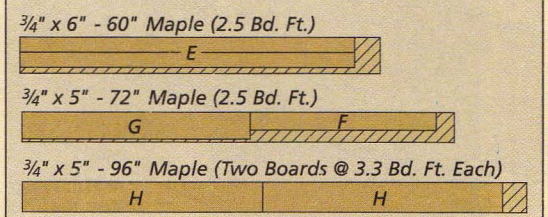

"MUST HAVE" SHOP JIGS

These quick and easy jigs will really go a long way toward helping you get the most out of your power tools and your woodworking.

Over the past twenty years, we've made quite a few jigs in our shop. Some of them were designed for a specific purpose, used once, and then hung on the wall where they've gathered dust ever since.

But there are a few jigs that get used all the time. In fact, they get used so much that we've even had to replace some of them — they've been worn out.

Jigs that are this handy actually become extensions of the power tools they're used with, making the tool all the more useful.

That's what all the jigs on the next few pages have in common. Try building one or two and pretty soon you'll be asking yourself how you ever got along without them.

You'll discover that they transform your everyday power tools into real performers, making your woodworking faster, easier, safer, and more accurate. And as a result, you'll get more satisfaction out of your woodworking.

But these jigs have something else in common. They can each be built in under an hour, and usually with pieces pulled from the scrap bin. So even though you'll find them invaluable in your shop, the initial investment is quite small.

Auxiliary Fence

In addition to cutting workpieces to size, I also use my table saw for cutting joints. And one of the joints that I make most frequently is a rabbet.

Typically, I use a dado blade to cut rabbets. But to do this, part of the blade needs to be "buried" in a wood auxiliary fence, see first photo at right.

Clamping a piece of wood to the side of your rip fence is one way to do this, but I prefer to use a slip-on auxiliary fence. The nice thing about this fence is that it can be dropped down over my rip fence in seconds — without having to fuss with clamps.

And by making one side of the fence 7" high, it doubles as a tall support fence when cutting tall pieces, see second photo.

CONSTRUCTION. The fence consists of two plywood sides glued and screwed to a pair of plywood spacer strips, see Fig. 1.

When cutting the spacer strips, it's important to make them the same width as your rip fence. The goal here is a nice, snug fit, allowing the auxiliary fence to slip over the rip fence easily, but without any play.

STOPS. Finally, to hold the fence in place, a couple of plywood stops are added to the ends, see Fig. 2.

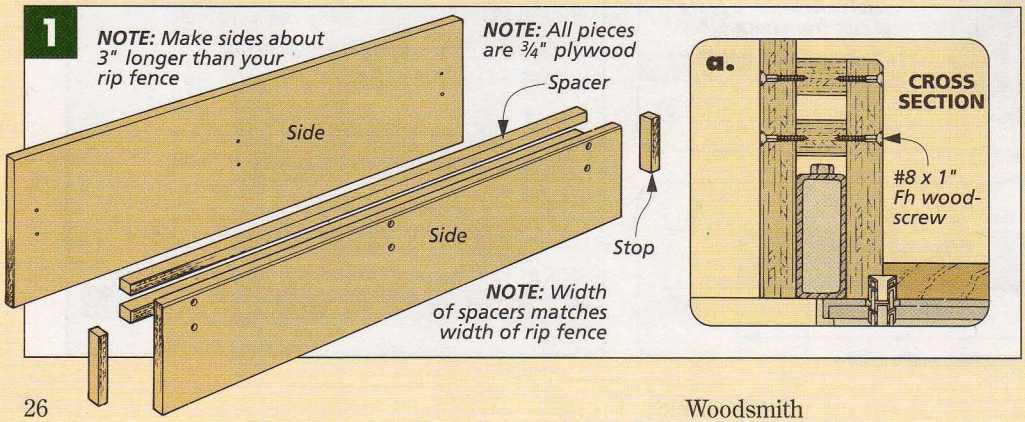

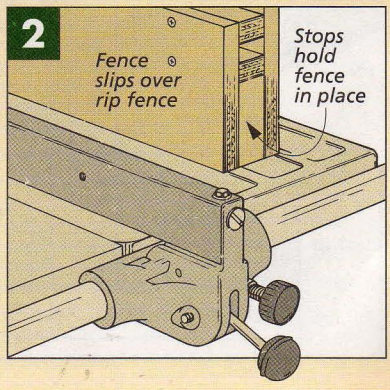

Push Block

I've seen a lot of push blocks or push sticks that are thin and narrow. This allows you to maneuver the push stick between the blade and the rip fence when ripping thin pieces.

But I find that trying to guide a workpiece through a saw with one of these push sticks is a little like trying to push a brick with a straw. This is one case where wider is better.

That's why I like this push block design. It's nothing more than an 8"-long block with a shallow notch cut on the bottom, see Fig. 1. The notch fits over the back edge of the workpiece that's being cut.

The wide profile of the block gives you plenty of control. And instead of fitting between the fence and the blade, this push block is designed to ride right over the blade, see Fig. 2.

After a while, the bottom of the push block will get "chewed up." When this happens, just throw it out and make a new one.

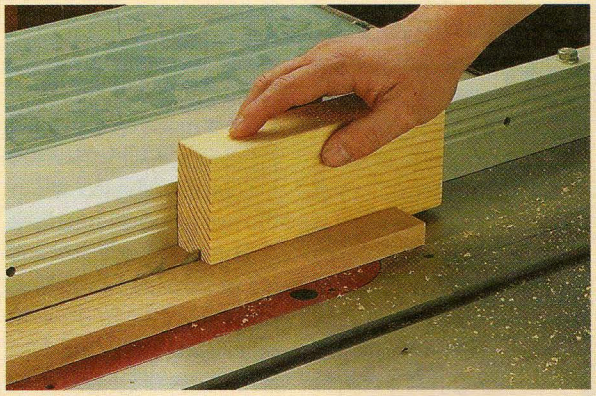

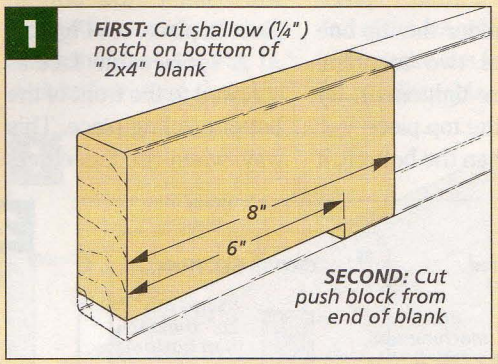

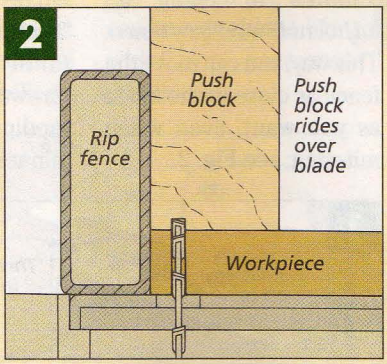

Crosscut Sled

The miter gauge that comes with most table saws is fine for crosscutting narrow pieces. But if you try to use it to crosscut a wide panel, you'll quickly discover how inadequate it is.

It rocks back and forth in the slot or bumps into the edge of the table saw top, making crosscutting not only difficult, but potentially dangerous as well.

That's why I like to use a crosscut sled when cutting large panels. This jig works like a giant miter gauge, allowing you to crosscut wider pieces.

The large, flat base of the sled provides plenty of support for wide panels. A pair of runners guides the sled and the workpiece smoothly through the saw. And a fence on the trailing edge of the sled ensures that every cut will be square.

CONSTRUCTION. To build the jig, start by cutting a piece of ¾"-thick plywood for the base. (I made mine about 16" x 30".)

Next cut a hardwood runner to fit in the miter gauge slot of your table saw. Size the runner so it slides smoothly in the slot. Then glue and screw it to the bottom of the base.

To keep the jig aligned, a second runner is added to the bottom of the base. This one rides against the edge of the table saw extension wing, see photo.

Once both runners are attached, place the jig on your saw and trim off the right edge of the base.

FENCE. For the fence, I used a piece of "2-by" stock with a chamfer routed on the bottom edge for a sawdust relief, see Fig. 1a.

To position the fence so that it's square to the blade, use a framing square, see Fig. 1. Then just screw the fence to the base.

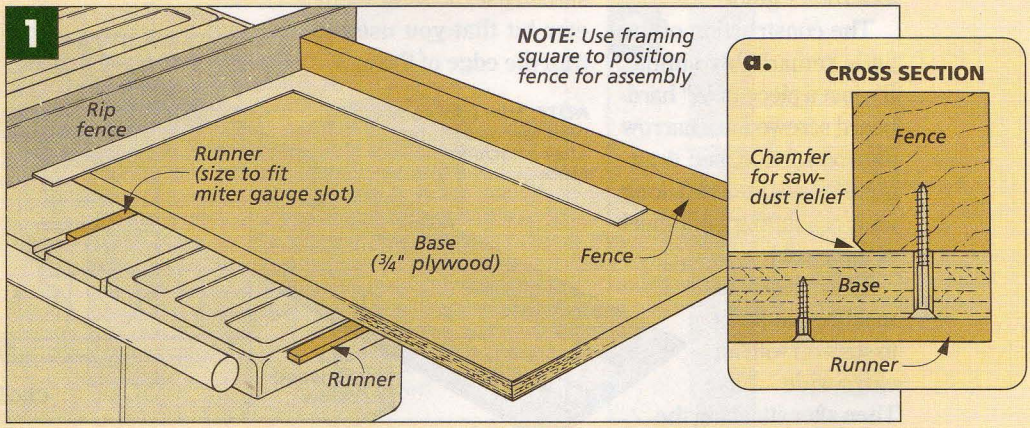

Miter Gauge Fence

Using a miter gauge without an auxiliary fence is like wearing a pair of trousers without suspenders (or a belt) — you just don't get the support you need.

And while it's pretty easy to just screw a piece of wood to the front of your miter gauge, I think it's worth taking just a couple minutes to make an *adjustable* auxiliary fence. This way, you can move the fence as close to the blade as you want, even when mitering, see Fig. 2.

JIG CONSTRUCTION. The "adjustable" part of the fence is made up of two sliding pieces, see Fig. 1. A rabbet cut on each piece allows the two pieces to interlock.

The top piece has a couple of threaded inserts so it can be attached to the miter gauge with machine screws, see Fig. 1a.

The bottom piece "floats" under the top one (until the two machine screws are tightened). By sanding the top piece 1/32" thinner than the bottom, it will "pinch" the bottom piece in place, see Fig. 1a.

A replaceable face is screwed to the front of the bottom sliding piece. This way, when the fence gets chewed up, you can make a new one.

STOP BLOCK. To make the fence even more useful, you can clamp a stop block to the face, see margin photo.

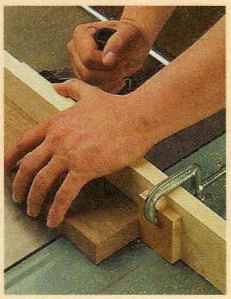

▲ *To make repeat cuts, clamp a stop block to the fence.*

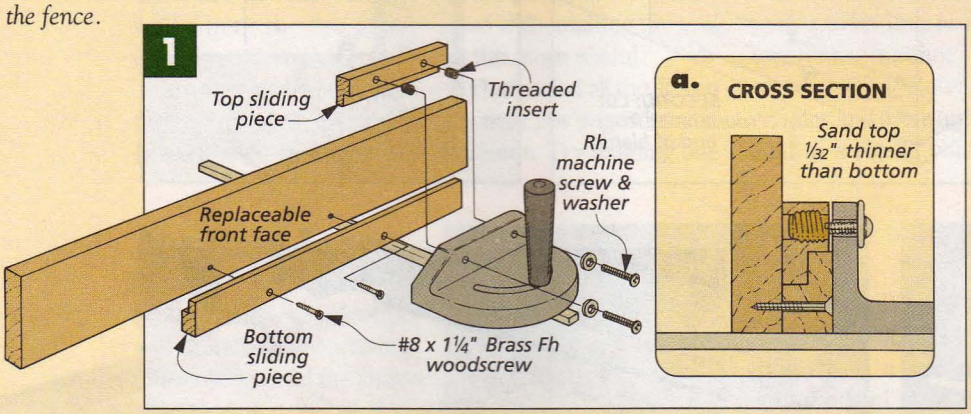

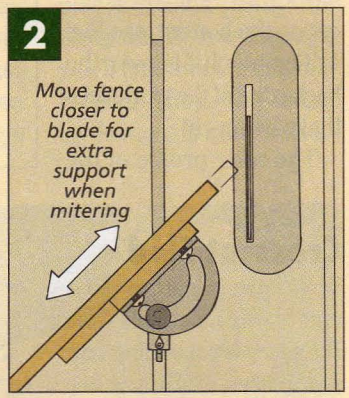

Plywood Edge Guide

Sometimes it's easier to use a circular saw to cut a full sheet of plywood than it is to balance a 4x8 sheet on the table saw. And a shop-made edge guide makes using a circular saw more accurate, see photo. But this edge guide has the added benefit of doubling as a router guide.

The construction of the jig is remarkably simple. It's just a piece of 1/4" hardboard screwed to a narrow plywood fence, see drawing. (I made mine 4 ft. long for cross-cutting a full sheet of plywood.)

The trick to making the jig is to start off with an extra-wide base. Then after attaching the fence, trim both sides of the base. One side is trimmed with a circular saw and the other with a router and a straight bit, see detail 'a.'

To use the jig, just place the edge of the base on your layout line and clamp the jig in place. (Note: If you're using a router, make sure to use the same diameter bit that you used to trim the edge of the jig.)

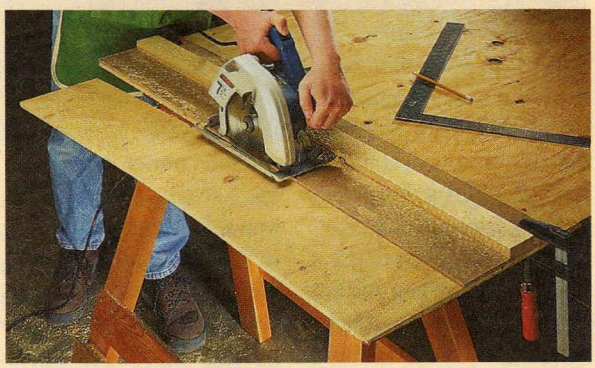

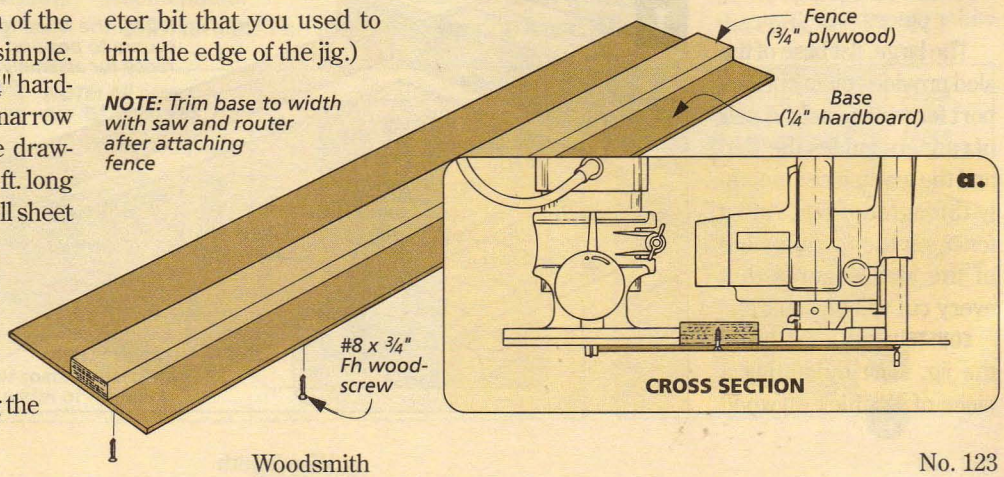

Drill Press Table

Most drill presses seem to be designed more for metalworking than for woodworking. They're equipped with dinky tables that lack any fences or guides. Fortunately, it doesn't take much to transform an ordinary drill press into a "real" woodworking tool.

To increase the working surface area of the drill press, I add an auxiliary table, see Fig. 1. This "table" is really nothing more than a piece of ¾" thick plywood that is screwed or bolted to the drill press table.

When determining the size of the auxiliary table, be careful not to make it so large that it sags or makes the drill press unstable. (I made mine 16" x 30".)

FENCE. The larger work surface is nice, but what really makes this jig useful is the fence, see photo. A fence is essential when you need to drill a series of holes all the same distance from the edge of a workpiece. And by clamping a stop block to the fence, you can drill identically positioned holes in multiple workpieces.

This fence is just a piece of "2-by" stock that is connected to one end of the table with a carriage bolt and a wing nut, see Fig. 1a. A chamfer routed along the bottom edge of the fence provides a relief for sawdust.

The carriage bolt allows the fence to pivot back and forth in relationship to the drill bit. When the fence is positioned where you want it, a small clamp can be used to secure the other end of the fence to the table.

To make the fence even more adjustable, I drilled a couple of extra holes along the end of the table so the fence can be repositioned for wider or narrower workpieces.

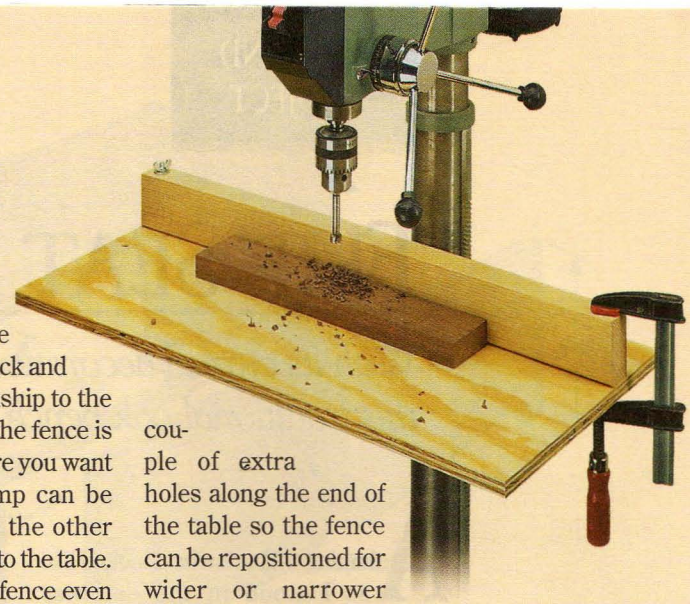

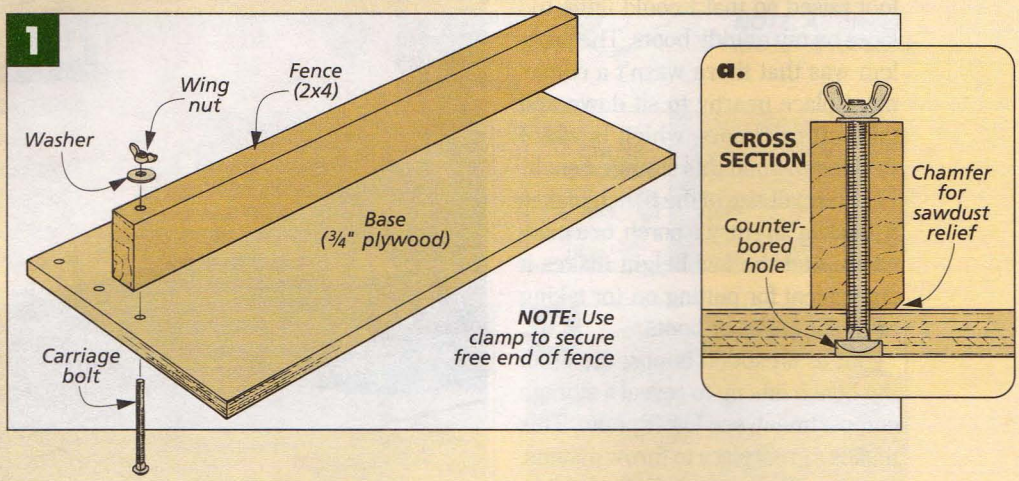

Band Saw Pivot Block

A band saw is a great tool for resawing thick lumber into thinner stock. But because most band saw blades have a tendency to "wander," controlling a cut can be difficult.

One solution is to use a simple support block, see photo. The nice thing about this block is that it allows you to pivot the workpiece as you push it through the saw to "follow" the direction the blade is wandering.

The guide is nothing more than a block of wood that has been beveled on one end to create a "V" point, see Fig. 1. On the other end, the top of the block is cut away to make it easier to clamp it to the table of the band saw.

To use the block, simply clamp it to the table so it's just slightly in front of the blade, see Fig. 2.

The distance between the block and the blade should equal the desired thickness of the stock you are cutting. Now just guide the workpiece through the saw, pivoting it against the block as needed. W

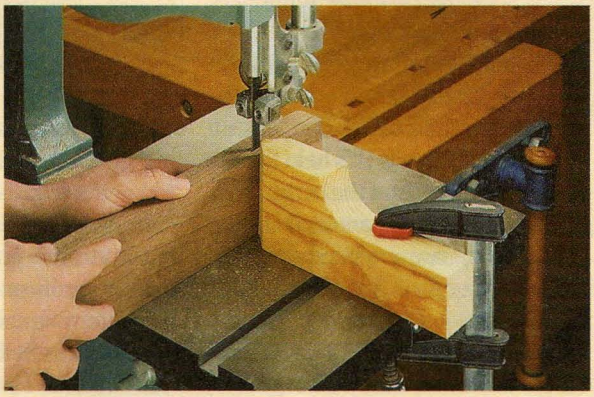

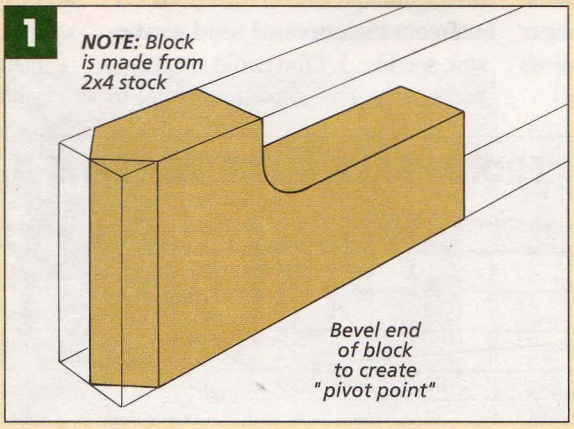

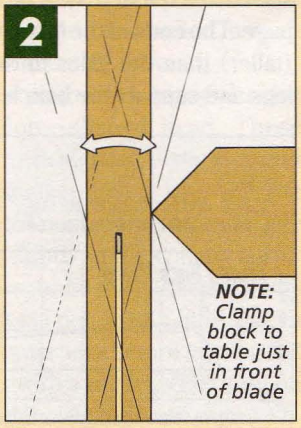

FLIP-SEAT STORAGE BENCH

With its curved decorative profiles and straightforward construction, this traditional oak bench makes a great weekend project.

A flamingo. That's what I looked like as I stood in the doorway perched on one leg, with my other foot raised so that I could untie the laces on my muddy boots. The problem was that there wasn't a convenient place nearby to sit down and take off my boots, which is why I decided to build this storage bench.

The small size of the bench makes it great for an entry, a porch, or a mudroom. And the low height makes it convenient for putting on (or taking off) your shoes or boots.

But as an added bonus, the lid of the bench lifts up to reveal a storage compartment, see lower photo. This makes a great place to throw mittens, scarves, gloves, earmuffs, umbrellas, or any other outdoor item.

CONSTRUCTION. One of the nicest things about this bench is that it isn't very difficult to build. There's no complicated joinery. (It's held together with screws.) And the scroll work at the bottom of the panels can be cut with a sabre saw or a band saw.

BASE

The base of the bench is just a four-sided box that's screwed together, see Base Exploded View on opposite page. The ends of the box are longer (taller) than the sides to double as legs and support the bench.

To build the base, I started by gluing up the panels for the two **ends (A)** and a **front** and **back (B)**. After cutting the panels to size, lay out the curves at the bottom of each panel using a cardboard template based on the patterns shown below. Shop Note: The patterns below are half patterns. You'll have to flip them over to lay out the right-hand side of the curve.

To cut the curves, I used a sabre saw, see Fig. 1. (You could also use a band saw.) The important thing to

▲ ***Flip your lid.*** *The top of this bench lifts up to reveal a compartment for storing gloves, scarves, umbrellas, and other accessories.*

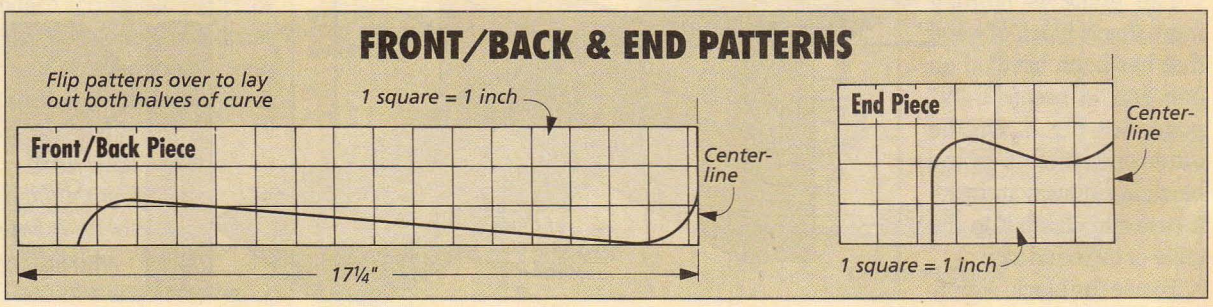

remember is to stay just to the waste side of the layout line. That way, you can sand down to the line to clean up any marks left behind by the saw.

SANDING. To smooth out the curves, I sanded the edges. A drum sander mounted in a drill press works fine for the gentle concave areas. But for the tighter curves, you'll have to do some hand sanding. To get into the tight corners, I found it helpful to place some adhesive-backed sandpaper on a narrow scrap of wood.

ROUNDOVERS. When the curves have been sanded nice and smooth, you can walk over to the router table with the end pieces in hand to rout the roundovers, see Fig. 2. First, an 1/8" roundover is routed along the bottom edges of the "feet" (the edges that will rest on the floor), see detail 'a' in Base Exploded View. Then identical roundovers are routed along the front and back edges of each end piece.

CLEATS. Before screwing the four pieces together, I added a cleat to the inside face of the front and back, see Base Exploded View. These cleats will support a row of slats that are added later to make up the bottom of the storage compartment.

The **cleats (C)** are nothing more than 3/4"-square strips that are cut to length and screwed to the front and back. When attaching the cleats, make sure they're flush with the ends of the front/back pieces. If they stick out at all, they'll prevent the ends from drawing up tight during assembly.

COUNTERBORES & PILOT HOLES. The ends are attached to the front and back with screws that are counterbored and later plugged, see detail 'b' in the Base Exploded View. Since these screws are fairly long (2 1/2") and are being driven into end grain, it's important to drill pilot holes in the workpieces beforehand to prevent the screws from breaking off in the wood, see Fig. 3a. (For more on drilling these long pilot holes, see page 18.)

In order to drill the pilot holes, the ends are clamped to the front and back, see Fig. 3. To help position these pieces while drilling the holes (and later during assembly), I made a couple of spacers. These are nothing more than 11"-wide plywood panels. The spacers are clamped to the end panels, between the front and back pieces, see Fig. 3.

WOOD PLUGS. Once the ends are glued and screwed to the front and back, a wood plug can be installed in each hole, see detail 'b' above.

I used plugs with tapered sides and a dome-shaped head. These plugs are designed to stand proud of the surface just a bit. And the tapered sides allow the plug to wedge in place tightly in the counterbore.

But just to be sure that the plugs wouldn't fall out, I put a little glue in each counterbore before tapping the plugs in with a mallet. (For a tip on installing these plugs, see page 18.)

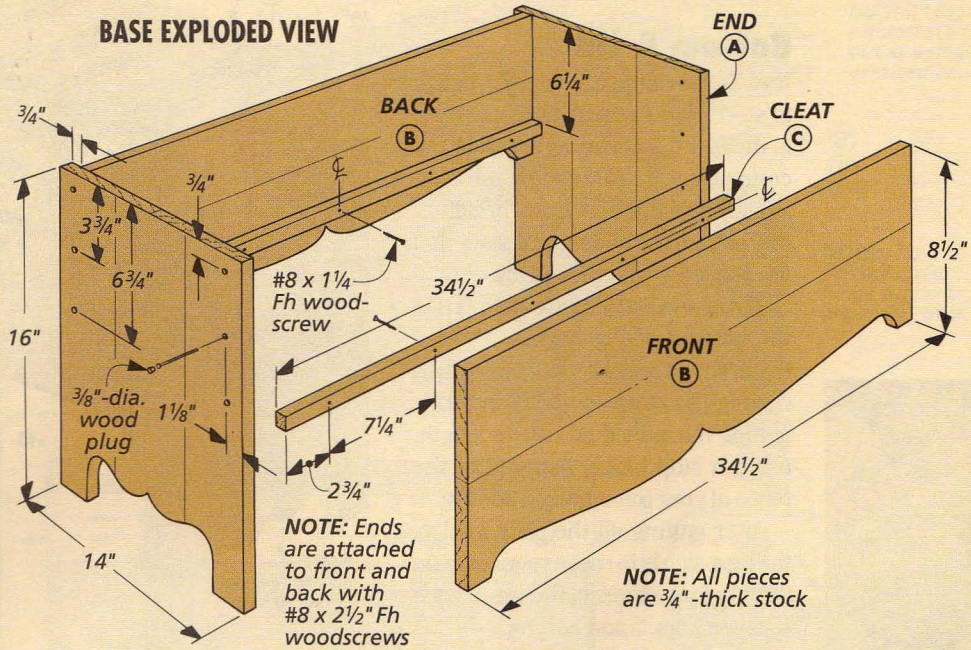

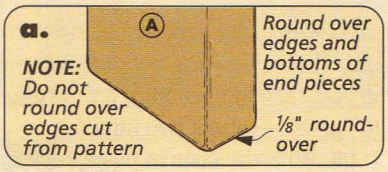

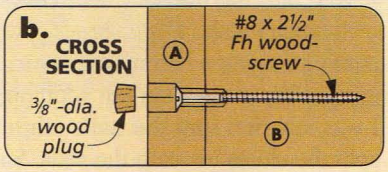

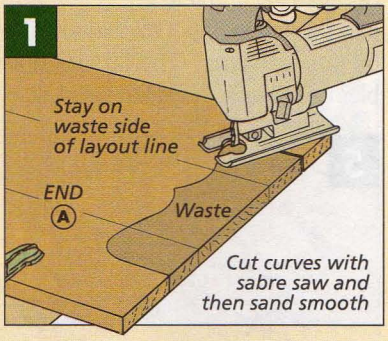

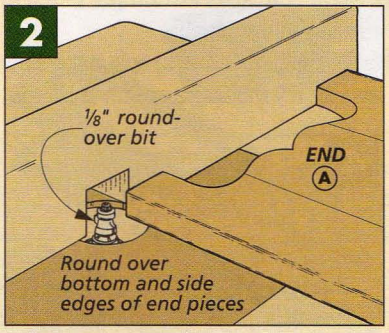

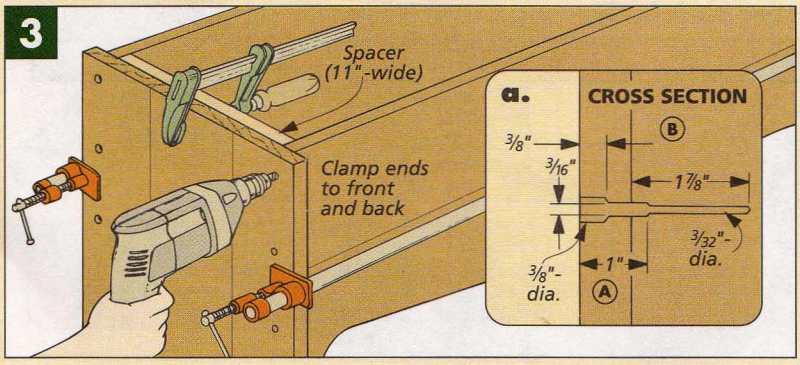

Bottom & Lid

If you're planning on using the bench to store clothes or apparel, moisture is the last thing you want inside the compartment. So to allow the storage area of the bench to "breathe," the bottom is made up of slats that are spaced ½" apart, see drawing.

There are ten ½"-thick **slats (D)** in the bottom of the bench. Making these slats is really nothing more than ripping the stock to width and then cutting the individual slats to length, using a stop block clamped to the fence of your miter gauge, see Fig. 4.

After cutting all the slats to size, the next step is to rout a roundover on the two long edges of the top of each slat, see Figs. 5 and 5a.

You could nail the slats to the cleats with small finish nails or brads. But trying to swing a hammer in such a confined space is tough. In addition, I was worried that the nails might split the cleats beneath the slats. So instead, the slats are simply glued to the top of the cleats.

To make it easier to space the slats evenly, try making a spacer block out of ½"-thick stock, see photo in margin. Then glue each slat and clamp it in place just long enough for the glue to "grab" — about five minutes.

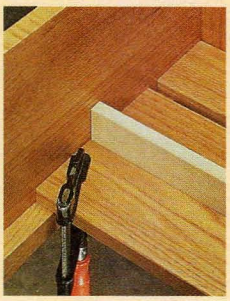

▲ *A scrap of ½"-thick stock can be used to space the slats evenly.*

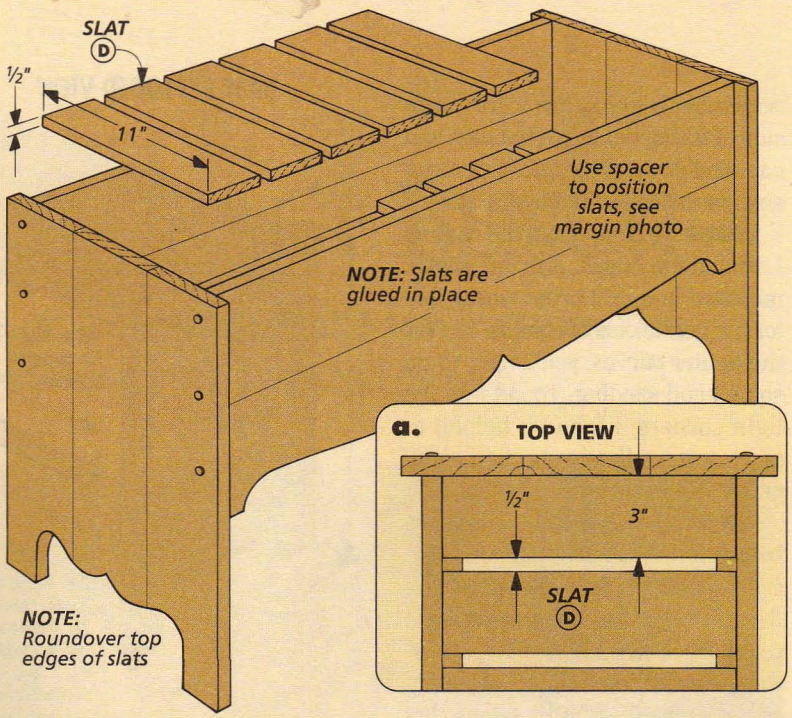

LID. With the slats in place, all that remains to complete the bench is to add the lid, see Lid Exploded View on opposite page. The lid also doubles as the seat. To make the lid, start by gluing up a single oversize blank for the lid and the hinge support.

Once the glue is dry, you can trim the blank to length (37½"). Then rip the blank into two pieces — one for the **lid (E)** and a narrow piece for the **hinge support (F)**.

HINGES. When it came to selecting hinges for the bench, I decided to

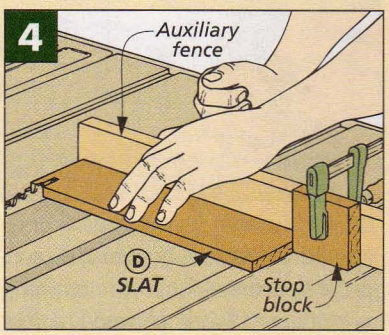

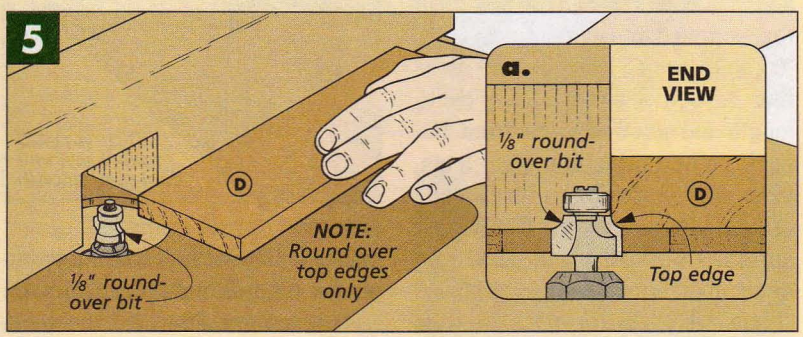

MATERIALS

A	Ends (2)	¾ x 14 - 16
B	Front/Back (2)	¾ x 8½ - 34½
C	Cleats (2)	¾ x ¾ - 34½
D	Slats (10)	½ x 3 - 11
E	Lid (1)	¾ x 13 - 37½
F	Hinge Support (1)	¾ x 2 7/16 - 37½
G	Lid Cleats (3)	¾ x 1½ - 10¼

SUPPLIES

- (12) #8 x 2½" Fh Woodscrews
- (19) #8 x 1¼" Fh Woodscrews
- (12) ⅜" Wood Plugs
- (3) 2" No-Mortise Hinges w/Screws
- (1) Lid Support w/Screws
- (2) ½"-dia. Felt Dots

CUTTING DIAGRAM

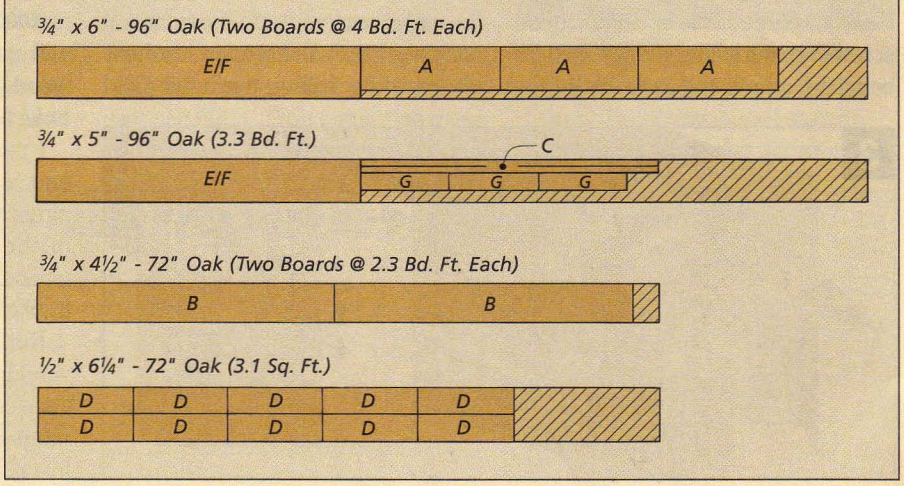

use no-mortise hinges that are simply screwed to the surface of the lid and hinge support, see photo at right. This way, you get the traditional look of a butt hinge, but without the hassle of having to cut mortises for the leaves of the hinge.

The only trick to mounting these hinges is laying out the screw holes in both pieces so they line up. To lay out the holes in the hinge support (F), simply place the hinge on the edge of the support and use it as a template to drill the holes.

With the hinges attached to the hinge support, I sandwiched some spacers in between the lid and hinge support and clamped the two pieces together, see Fig. 6. (The thickness of the spacers should match the thickness of the hinge barrel.)

LID CLEATS. Because the lid is a solid wood panel, it will have a tendency to cup over time. To help prevent this and keep the lid flat, I screwed three 3/4"-thick **lid cleats (G)** to the underside of the lid, see detail 'a.' Routing 1/8" roundovers on the cleats helps to soften the sharp edges.

ATTACHING THE LID. The lid and hinge support are attached to the base of the bench as a unit. Before doing this however, I routed an 1/8" roundover on the outer edges.

Attaching the lid involves nothing more than gluing the hinge support to the base of the bench, see Fig 7. To do this, start by placing the lid assembly on the base and centering it, see Fig. 7a. Then with the lid clamped down to the base of the bench, just lift up the hinge support to apply the glue to the base of the bench.

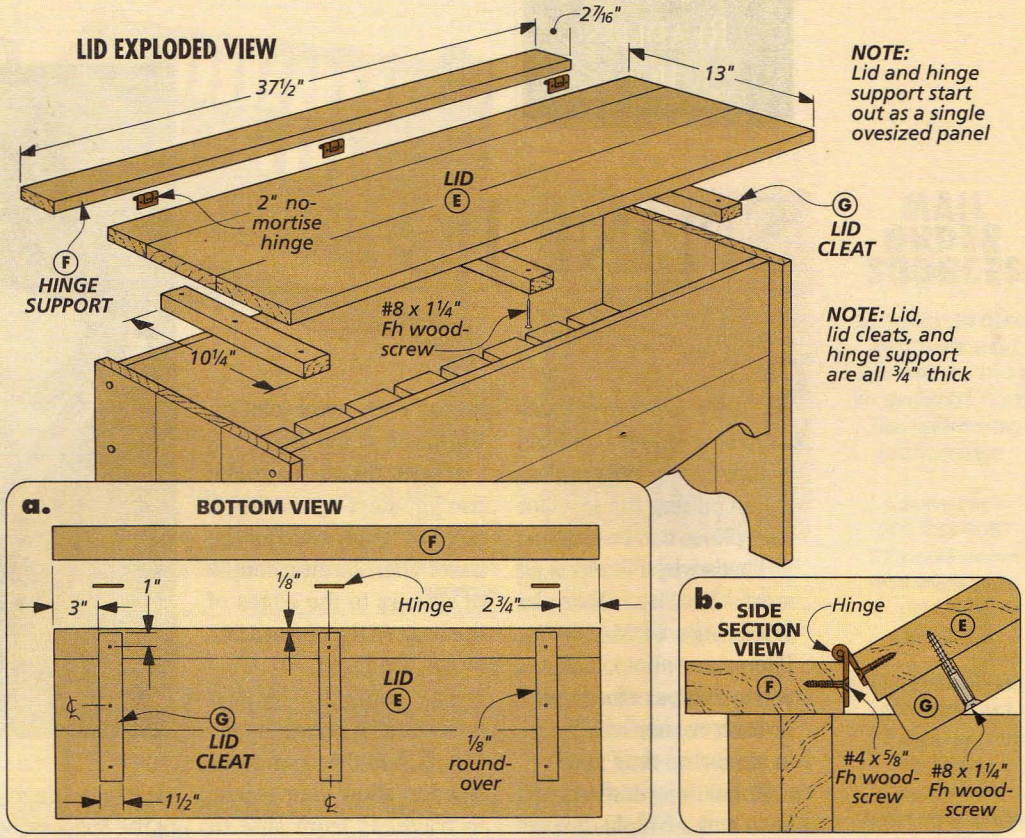

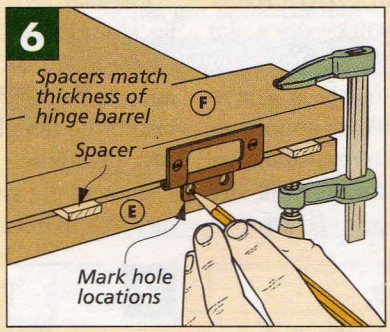

These hinges don't require a mortise. They mount directly to the surface of the workpieces.

LID SUPPORT. To prevent the lid from slamming down on little fingers or from opening back too far, I added a safety lid support. This support gets screwed to the underside of the lid and the inside face of one of the end pieces, see Figs. 8 and 8a.

I finished the bench by building up several coats of a wipe-on finish, sanding lightly between coats with 400-grit sandpaper.

After the last coat of finish was dry, I added a couple of adhesive-backed felt dots to the underside of the lid to cushion it as it's closed. Then I sat down and took my shoes off. W

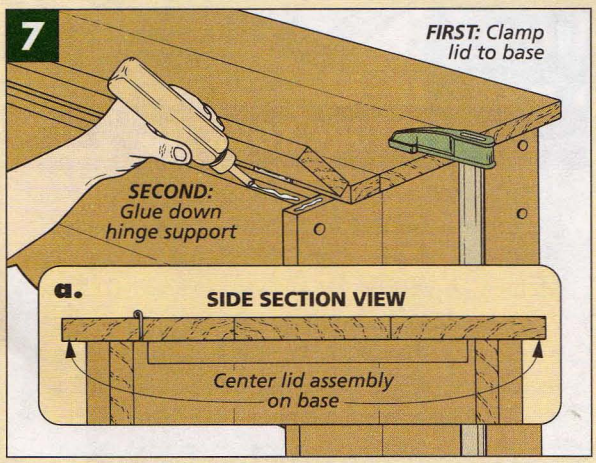

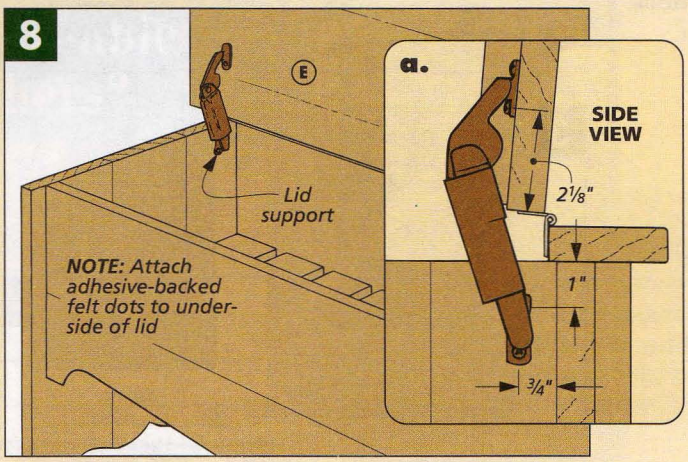

SPLINE JIG

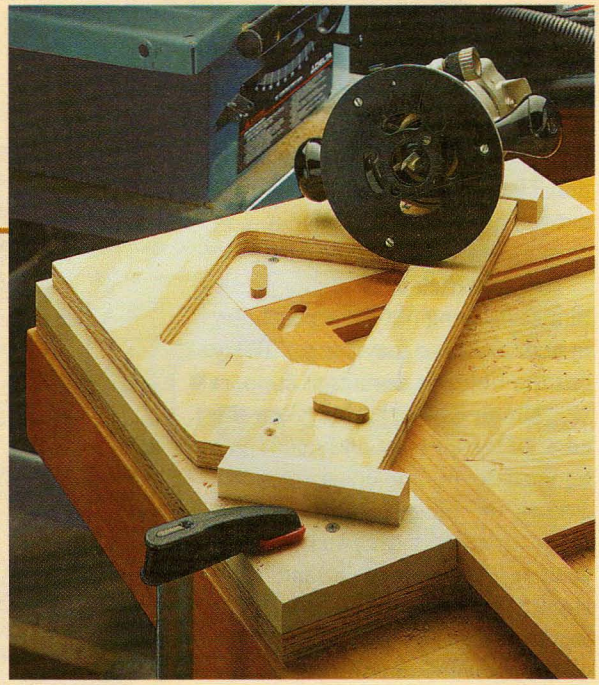

Splines are a great way to strengthen a mitered picture frame. The problem is that cutting the slots for the splines can be tedious.

That's why I like this jig sent in by **Ronald Huizenga** of Morrison, Illinois, see photo. It allows you to rout a slot for a spline in each corner of a frame in almost no time at all.

Ronald's jig consists of a base and a couple of spacers that help position the picture frame.

But the most important part of the jig is a template that "corrals" the router and controls its travel. This makes it easy to rout a 1¼"-long slot across each miter joint on the back of the frame.

MAKING THE JIG. To make the jig, start by cutting a piece of ¾" plywood for the base. Then screw a couple of spacers to the edges of the base so they form a 90° angle, see Fig. 1.

The template is also made out of plywood, see Fig. 2. And the opening is sized to allow your router to travel 1" from side to side. (With a ¼"-dia. router bit, this will create a slot that is 1¼" long.)

The template is held in place with a couple of screws. To reposition the template for different size frames, a pair of hardwood cleats are glued to the top of the spacers, see Fig. 3.

USING THE JIG. To use the jig, simply place the frame (face down) on the base against the spacers. Then clamp the template down over the frame.

To rout the slot, simply turn the router on, slowly lower it down in the template opening, and slide it over to the right.

Now just cut some splines out of ¼"-thick hardboard to glue into the slots, see Fig. 3a and drawing in margin. (You'll have to round off the ends of the splines first.)

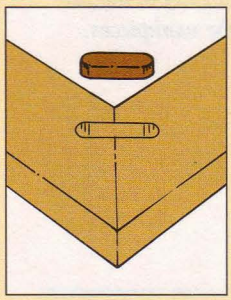

▲ *Cross-joint splines strengthen a miter joint by increasing the glue area.*

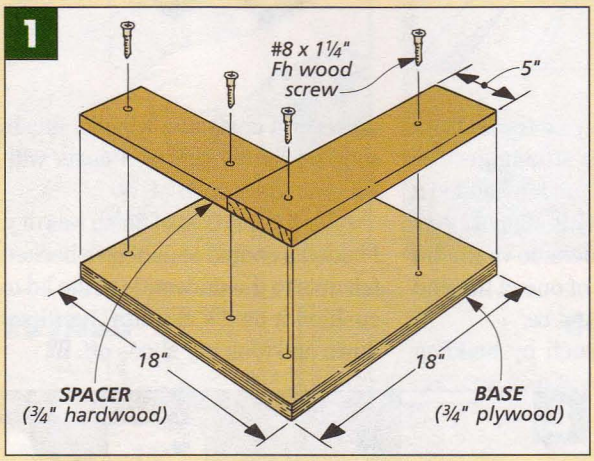

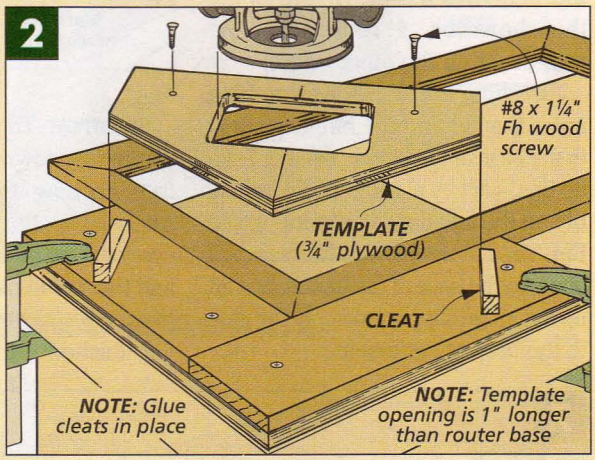

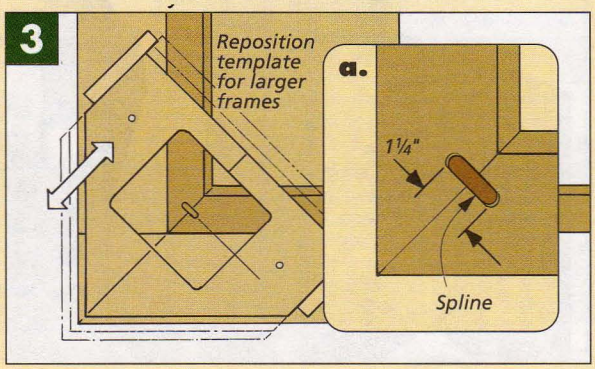

FEATURE YOUR JIG

If you've built an original woodworking jig and would like to see it featured on this page, send your idea to *Woodsmith*, Reader's Jig, 2200 Grand Avenue, Des Moines, IA 50312.

If we publish your jig, we will send you $100 and a full set of *Woodsmith* back issues, with binders. Include a sketch (or photo), explain how it's used, and please include a daytime phone number.

SOURCES

Woodsmith Project Supplies is currently offering hardware kits for some of the projects in this issue. Similar supplies, as well as supplies for the other projects featured, are also available at local woodworking stores or the mail order sources at right.

TV STAND

The TV stand on page 6 requires quite a bit of hardware, see photo above right. Currently, *Woodsmith Project Supplies* has put together a kit that includes all the hardware you'll need to build the stand, including the 3"-dia. casters, center-mount slides, 1"-dia. cherry knobs, screws, and other supplies. (For a complete hardware list, see the box on page 13.)

• TV Stand Hardware Kit
7123-100 .....$94.95

Note: Similar hardware for this project is also available through the sources listed at right.

FINISH. On our TV stand, we stained the edging black with a water-based aniline dye. If you can't find any dye locally, it can be purchased from the sources at right.

CD TRAYS. If you would like to store CD's (or DVD's) in the drawers of the stand, you can purchase plastic holders to attach to the drawers, see left photo.

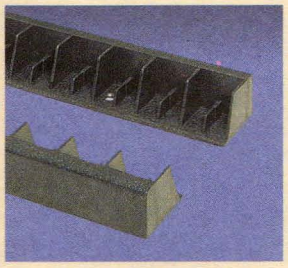

▲ *Optional plastic trays let you store CD's in the drawers of the TV stand.*

PLATE JOINERS

If you're in the market for a plate joiner, you won't have a problem finding one. However, knowing which features to look for isn't always obvious. For a review of five plate joiners on the market, check out the tool review on our website (point your browser to: www.augusthome.com/toolrevs.htm). This review appeared in one of our other publications, *ShopNotes* (No. 33). You can order a copy from *Woodsmith Project Supplies*, see left box below.

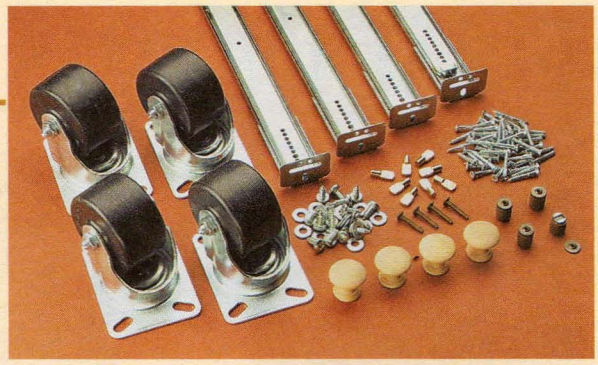

▲ *The hardware kit for the TV stand includes everything you need, including the wide-wheeled casters (3"-dia.), center-mount slides, and 1"-dia. cherry knobs.*

STORAGE BENCH

To build the storage bench on page 30, we used "no-mortise" hinges and a lid support that prevents the lid from slamming on any small fingers, see photo at right. *Woodsmith Project Supplies* has put together a kit that includes most of the hardware you need to build the storage bench, including full-sized patterns for the decorative profiles (not available separately). Note: This kit does *not* include the wood plugs used to hide the screw heads, but these should be readily available at a local hardware store or through the mail order sources listed at right.

• Storage Bench Kit
7123-200 .....$15.95

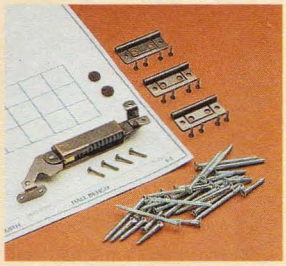

▲ *Hardware and patterns are available for the flip-seat storage bench.*

MAIL ORDER SOURCES

Similar project supplies and hardware may be ordered from the following companies:

Constantine's
800-223-8087
TV stand hardware (with maple knob), CD holders, Aniline dyes

Rockler Woodworking
800-279-4441
TV stand hardware, CD holders, Aniline dyes, Storage bench hardware

Woodcraft
800-225-1153
TV stand hardware, CD holders, Aniline dyes, Storage bench hardware

Woodworker's Supply
800-645-9292
TV stand hardware, CD holders, Aniline dyes, Storage bench hardware

WOODSMITH PROJECT SUPPLIES

To order hardware kits or shop drawings from *Woodsmith Project Supplies*, please use our Toll Free order line, see below. It's open Monday through Friday, from 8 AM to 5 PM Central Time. Before calling, please have your VISA, MasterCard, or Discover Card ready.

If you would like to mail in your order, call the number below for more information concerning shipping charges as well as any applicable sales tax.

1-800-444-7527
When ordering, please use Key W123

Note: Prices subject to change after August 1999.

Woodsmith *on the web*

- Over 100 Woodworking Tips Online
- Project Plans You Can Download
- Catalog of Project Kits, Tools & Jigs
- Forums for Woodworking, Tools & Classifieds
- Links to Other Woodworking Sites
- *Woodsmith/ShopNotes* Back Issue Index
- Visit our other August Home Publication sites

www.woodsmith.com

New On-line Customer Service
Click on Subscriber Services at
www.woodsmith.com
- Access your account status
- Find out if your payment has been received
- Change your mailing or e-mail address
- Tell us if you've missed an issue

FINAL DETAILS

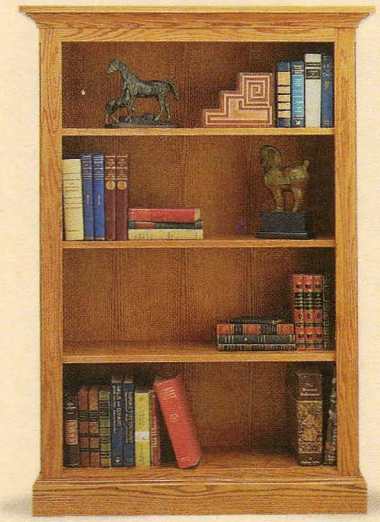

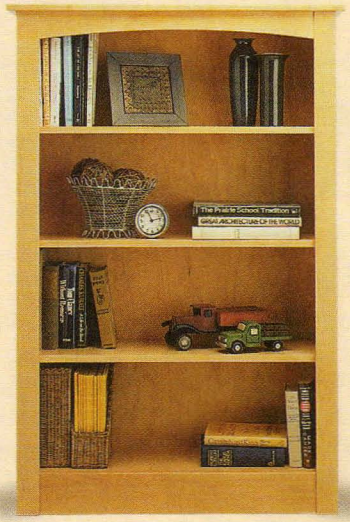

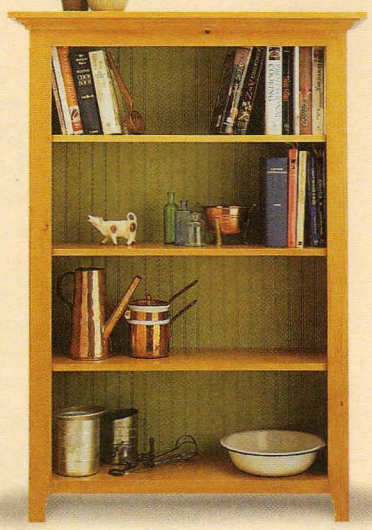

▲ **Bookcases.** *All three of these bookcases start out with the same basic "skeleton." But you can choose any one of these three finished looks by adding different moldings and face frames. Turn to page 20 for easy-to-follow directions.*

TV Stand. ► *"Floating" on hidden casters, this cherry TV stand will be easy to move any time you want a better view. Step-by-step instructions begin on page 6.*

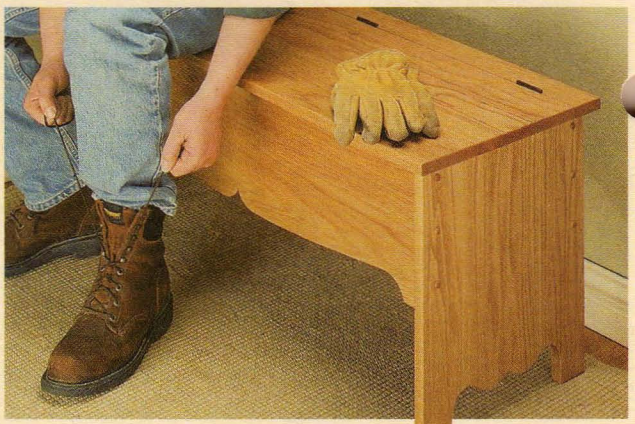

▲ **Flip-Seat Storage Bench.** *This bench is the perfect place to sit down and lace up your boots. Plus the hinged lid lifts to reveal a storage compartment inside. Plans begin on page 30.*